PINELLAS COUNTY ENGINEERING DEPARTMENT
STATE OF FLORIDA

PLANS OF PROPOSED

FORT DESOTO WATER CIRCULATION IMPROVEMENT

SERVING YOU EVERY DAY

PINELLAS COUNTY GOVERNMENT IS COMMITTED TO PROGRESSIVE PUBLIC POLICY, SUPERIOR PUBLIC SERVICE, COURTEOUS PUBLIC CONTACT, JUDICIOUS EXERCISE OF AUTHORITY AND SOUND MANAGEMENT OF PUBLIC RESOURCES TO MEET THE NEEDS AND CONCERNS OF OUR CITIZENS TODAY AND TOMORROW.

P.I.D. NO. 921573

RELATED STANDARDS AND SPECIFICATIONS

DOCUMENT	DESCRIPTION
D-1	FLORIDA DEPARTMENT OF TRANSPORTATION "STANDARD SPECIFICATIONS FOR ROAD AND BRIDGE CONSTRUCTION", 2000 AND ALL SUPPLEMENTAL SPECIFICATIONS THERETO.
D-2	STATE OF FLORIDA "MANUAL OF UNIFORM MINIMUM STANDARDS FOR DESIGN, CONSTRUCTION AND MAINTENANCE FOR STREETS AND HIGHWAYS", MAY, 2001.
D-3	FEDERAL HIGHWAY ADMINISTRATION "MANUAL ON UNIFORM TRAFFIC CONTROL DEVICES FOR STREETS AND HIGHWAYS".
D-4	PINELLAS COUNTY "SPECIFICATIONS FOR HOT BITUMINOUS MIXTURES, PLANT METHODS, EQUIPMENT AND CONSTRUCTION METHODS", JULY, 2000.
	NOTE: THE PROVISIONS OF DOCUMENT D-4 SHALL SUPERSEDE CORRESPONDING PROVISIONS OF DOCUMENT D-1.
D-5	FLORIDA DEPARTMENT OF TRANSPORTATION "ROADWAY AND TRAFFIC DESIGN STANDARDS", JANUARY, 2000.
D-6	PINELLAS COUNTY ENGINEERING DEPARTMENT "SPECIFICATIONS FOR ROAD AND DRAINAGE CONSTRUCTION" (FOR CONTRACT CORRESPONDING TO THESE PLANS).
D-7	PINELLAS COUNTY, DEPARTMENT OF PUBLIC WORKS "STANDARD CONSTRUCTION DETAILS" (JANUARY, 1999).

ATTENTION IS DIRECTED TO THE FACT THAT THESE PLANS MAY HAVE BEEN REDUCED IN SIZE BY REPRODUCTION. THIS MUST BE CONSIDERED WHEN OBTAINING SCALED DATA.

UTILITY WARNING NOTE

ABOVE GROUND AND UNDERGROUND UTILITIES MAY BE IN THE AREA OF THIS PROJECT - PROCEED WITH CAUTION - CALL "SUNSHINE" AND THE UTILITY OWNER(S) 2 WORKING DAYS IN ADVANCE OF BEGINNING WORK (1-800-432-4770).

SUMMARY OF REVISIONS	
DATE	DESCRIPTION

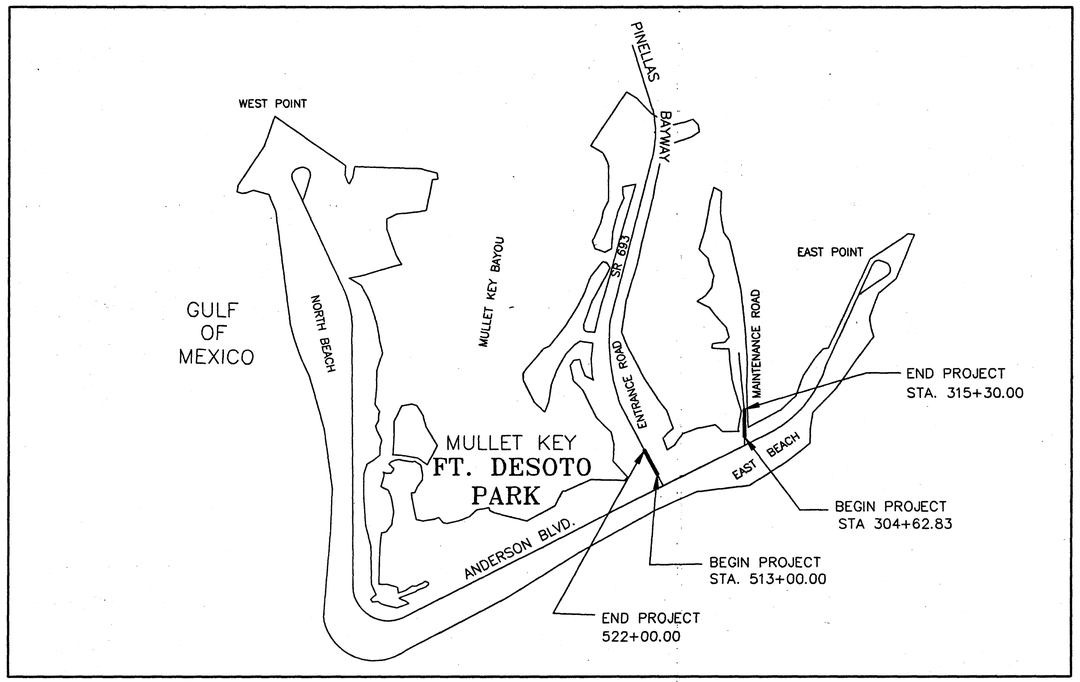

N.T.S.

SECTION No. 8, 9
TOWNSHIP No. 33 S RANGE No. 16 E

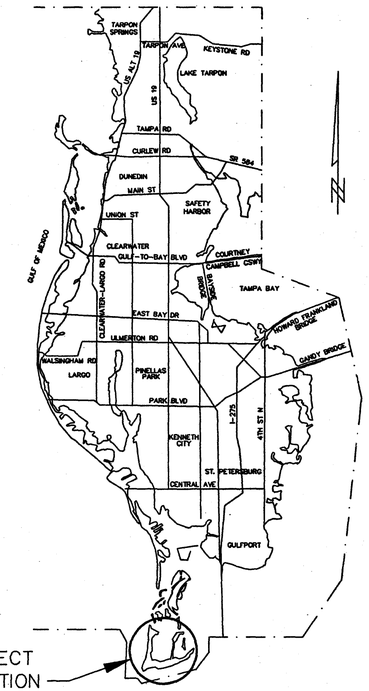

INDEX OF PLANS

SHEET NO.	SHEET DESCRIPTION
C-1	KEY SHEET
C-2	SUMMARY OF QUANTITIES
C-3	DRAINAGE MAP
C-4	GENERAL NOTES, MAINTENANCE OF TRAFFIC NOTES & SEDIMENTATION CONTROL NOTES
C-5	TYPICAL SECTIONS
C-6	CHANNEL CONSTRUCTION GENERAL NOTES & TYPICAL SECTIONS
C-7 TO C-8	PLAN & PROFILE ENTRANCE ROAD
C-9 TO C-10	PLAN & PROFILE ENTRANCE CHANNEL
C-11 TO C-12	PLAN & PROFILE MAINTENANCE ROAD
C-13	PLAN & PROFILE MAINTENANCE CHANNEL
C-14	PROFILE RELOCATED BIKE PATH
C-15 TO C-22	CROSS SECTIONS
C-23	DRAINAGE DETAILS
C-24	RAMP AND PULL BOX DETAILS
C-25	TEMPORARY ENTRANCE ROAD PLAN & PROFILE
C-26	TEMPORARY MAINTENANCE ROAD PLAN & PROFILE
SHEET 1-41	STRUCTURE PLANS (ENTRANCE & MAINTENANCE RD. BRIDGES)
U	ATTACHED UTILITY RELOCATION PLANS (TELEPHONE & LIGHTING)

LENGTH OF PROJECT	TOTAL	
	LIN. FT.	MILES
BRIDGES	128.68	0.0244
NET LENGTH OF PROJECT	1,967.17	0.3726
EXCEPTIONS	0.00	0.000
GROSS LENGTH OF PROJECT	1,967.17	0.3726

ROAD CLASSIFICATION: PARK
DESIGN SPEED: 40 MPH

TONY HORRNIK, P.E.
FLORIDA REGISTERED PROFESSIONAL ENGINEER No. 41941
440 COURT STREET
CLEARWATER, FLORIDA 33756
(727) 464-3640

02/26/03
DATE

PROJECT PRODUCTION TEAM
(CORE MEMBERS)

DESIGN: GUILLERMO "BILLY" BAY (PROJECT MANAGER) (464-4369)
PARK ENGINEER: ED LUCAS
PARK SUPERVISOR: BOB BROWNING
D.E.M.: JIM MEYER
RIGHT-OF-WAY: SONNY NAAR
CONSTRUCTION: DON KERSTING
SURVEY: DANNY BURGESS
TRAFFIC: ROBERT DAVIS
HIGHWAY: DENNIS GRIZZELL
UTILITY COORDINATOR: SANDY KELLEY
PERMIT COORDINATOR: NANCY CASTRICONE,P.E.

SUBMITTED BY & RECOMMENDED FOR APPROVAL BY: RUDY GARCIA, DIVISION ENGINEER — 2/26/03 DATE

RECOMMENDED FOR APPROVAL BY: ELIZABETH WARREN, DIRECTOR OF PARK DEPARTMENT — 2/26/03 DATE

RECOMMENDED FOR APPROVAL BY: JAN R. HERBST, P.E., DIRECTOR OF ENGINEERING — 2/27/03 DATE

APPROVED BY: J. KEITH WICKS, P.E., DIRECTOR OF PUBLIC WORKS — 2/28/03 DATE

FT DE SOTO PARK WATER CIRCULATION IMPROVEMENTS

FORT DESOTO WATER CIRCULATION IMPROVEMENT (ENTRANCE AND MAINTENANCE ROADWAY)
SUMMARY OF QUANTITIES

ITEM NUMBER	ITEM DESCRIPTION	UNIT	ENTRANCE ROAD	MAINTENANCE ROAD	TOTAL
101-0100	MOBILIZATION	LS	1	1	2
102-0100	MAINTENANCE OF TRAFFIC	LS	1	1	2
104-1006	HAY BALES	TN	1.5	1.5	3
104-1007	SILT FENCE, STAKED (TYPE III)	LF	2,580	2,730	5,310
104-1112	TURBIDITY BARRIER, FLOATING	LF	1,000	1,000	2,000
110-0104	DEMOLITION, CLEARING, AND GRUBBING	LS	1	1	2
120-0050	EMBANKMENT	CY	7991	7127	15118
120-1100	GRADING	LS	1	1	2
125-3057	BEDDING MATERIAL, CRUSHED STONE SIZE # 57	TN	14.5	11	25.5
160-0009	9" STABILIZATION TYPE B , LBR 40, 9" THICKNESS, MIN. (BIKE PATH) *	SY	1557	0	1557
160-0012	12" STABILIZATION TYPE B , LBR 40, 9" THICKNESS, MIN.(ROAD) *	SY	4324	3746	8070
204-1006	ROADWAY BASE, CRUSHED CONCRETE, PRIMED, 6" THICKNESS, MIN.(ALTERNATE BT-1)*	SY	1557	0	1557
204-1008	ROADWAY BASE, CRUSHED CONCRETE, PRIMED, 8" THICKNESS, MIN.(ALTERNATE BR-1)*	SY	3750	3131	6881
280-0040	ASPHALTIC CONCRETE BASE COURSE, TYPE PC-1, 4 1/2' THICKNESS(ALTERNATE BT-2) *	SY	1557	0	1557
280-0065	ASPHALTIC CONCRETE BASE COURSE, TYPE PC-1, 6 1/2" THICKNESS(ALTERNATE BR-2) *	SY	3750	3131	6881
391-0200	ASPHALTIC CONCRETE, TYPE PC-1, 2" THICKNESS, MIN., SURFACE COURSE (ROAD) *	SY	3750	3131	6881
393-0125	ASPHALTIC CONCRETE, TYPE PC-3, 1 1/4" THICKNESS, MIN.,SURFACE COURSE(BIKEPATH) *	SY	1557	0	1557
400-1102	CONCRETE, CLASS I ,GRAVITY WALL, COMPLETE, INCLUDES REINFORCING STEEL *	CY	185	448	633
400-1-2505	CONCRETE CLASS IV, (WEIR) *	CY	10.50	10.50	21
425-336-0000	INLET, DITCH BOTTOM TYPE D, UNDER 10' (MODIFIED)	EA	2	2	4
425-521-0000	INLET, GUTTER, FDOT TYPE S, UNDER 10'	EA	4	4	8
430-121-0015	PIPE CULVERT, CONCRETE, ROUND, 15" ID	LF	128	96	224
514-1	FILTER FABRIC	SY	1900	1800	3700
515-1-20811	HANDRAIL, ALUMINUM PIPE, 2" ID	LF	130	195	325
520-1-01	SHOULDER GUTTER *	LF	1262	1275	2537
522-4001	SIDEWALK, CONCRETE, 4" MIN. THICKNESS*	SY	142	172	314
524-2-6	SLOPE PAVEMENT (CONCRETE CLASS II) (6") (REINFORCED)	SY	398	237	635
530-2101	RIPRAP, RUBBLE *	TN	1048	804	1852
530-2102	RIPRAP, RUBBLE (SUPPLIED BY PINELLAS COUNTY) *	TN	500	500	1000
536-1001	GUARDRAIL, METAL, WITH TIMBER POSTS, FDOT INDEX 400	LF	968	928	1896
536-4001	BRIDGE ANCHORAGE ASSEMBLY , FDOT	EA	4	4	8
536-0300	END ANCHORAGE ASSEMBLY, FLARED END SECTION	EA	4	4	8
575-1102	SOD, SALT JOINT GRASS *	SY	7962	9272	17234
715-0101	STREET LIGHTING CONDUIT, PVC SCHEDULE 40, 2-1/2" ID (UNDERGROUND)	LF	1200	0	1200
715-0110	SWEEP, (ELBOW), 2-1/2' ID, 36" RADIUS, MIN. (FOR STREET LIGHTING CONDUIT)	EA	16	0	16
715-0115	PULL BOX, FOR STREET LIGHTING CONDUIT	EA	8	0	8
900-0200	OFFICE FOR THE ENGINEER	DA	180	90	270
1600-600-016	DISCONNECT AND PLUG 6" WATER MAIN	EA	0	1	1
1600-600-018	DISCONNECT AND PLUG 8" WATER MAIN	EA	1	0	1
1600-600-021	DISCONNECT AND PLUG 12" WATER MAIN	EA	1	0	1
1612-190-509	2" SERVICE TUBING	LF	200	140	340
1613-130-314	FURNISH AND INSTALL 4" PVC PUSH ON JOINT, CLASS 150, DR-18	LF	200	140	340
1613-140-716	6" D.I. PIPE CLASS 50	LF	0	40	40
1613-140-718	8" D.I. PIPE CLASS 50	LF	40	0	40
1613-940-024	PIPE REMOVAL	LF	100	100	200
1618-190-316	HIGH DENSITY PIPE (SDR-II) (ID 6") DIRECTIONAL BORE METHOD	LF	0	1040	1040
1618-190-318	HIGH DENSITY PIPE (SDR-II) (ID 8") DIRECTIONAL BORE METHOD	LF	920	0	920
1643-131-103	6" X 6" TAPPING SLEEVE, VALVE AND BOX	EA	0	2	2
1643-131-106	8" X 8" TAPPING SLEEVE, VALVE AND BOX	EA	2	0	2
1648-100-009	2" PERMANENT BLOW-OFF ASSEMBLY	EA	1	1	2
1691-121-016	6" REVERSE DEADMAN FOR 6" PIPE	EA	0	2	2
1691-121-119	8" REVERSE DEADMAN FOR 8" PIPE	EA	1	0	1
1691-121-212	12" REVERSE DEADMAN FOR 12" PIPE	EA	1	0	1
600-5004	LINE INSTALLATION, REPLACEMENT OR REPAIR, 4" DIP (CLASS 50)	LF	0	40	40
600-5100	LINE INSTALLATION, REPLACEMENT OR REPAIR, 10" DIP (CLASS 50)	LF	40	0	40
600-7004	ADJUST OR INSTALL FORCE MAIN, 4" HDPE (SDR II) BY DIRECTIONAL BORE METHOD	LF	0	1020	1020
600-7011	ADJUST OR INSTALL FORCE MAIN, 10" HDPE (SDR II) BY DIRECTIONAL BORE METHOD	LF	860	0	860
600-8002	2" AIR RELEASE VALVE ASSEMBLY W/ MANHOLE	EA	1	1	2
600-9704	FURNISH AND INSTALL 4" X 4" TAPPING SLEEVE, VALVE AND BOX	EA	0	2	2
600-9710	FURNISH AND INSTALL 10" X 10" TAPPING SLEEVE, VALVE AND BOX	EA	2	0	2
600-9702	SPECIAL REVERSE DEADMAN FOR 10" PIPE	EA	2	0	2
600-9703	SPECIAL REVERSE DEADMAN FOR 4" PIPE	EA	0	2	2
600-9714	4" SLEEVE CONNECTION	EA	0	2	2
600-9731	10" SLEEVE CONNECTION	EA	2	0	2

NOTE: * INDICATES 10% CONTINGENCY

REVISIONS	BY	DATE

SURVEY BOOK No.:
SURVEY DIVISION
SURVEYED
TECHNICIAN
CHECKED
DESIGN DIVISION
DESIGNED GQB 10/02
DRAWN GQB 10/02
CHECKED

PINELLAS COUNTY, FLORIDA
Public Works

LAND SURVEY DIVISION
22211 U.S. HWY. 19 NORTH
CLEARWATER, FLORIDA 34625-2347
PHONE (727) 464-8904

ENGINEERING DEPARTMENT
440 COURT STREET
CLEARWATER, FLORIDA 34616
PHONE (727) 464-3261

TONY HORRNIK, FLORIDA REGISTERED PROFESSIONAL ENGINEER No. 41941 — DATE 02/25/03

FORT DESOTO
WATER CIRCULATION
IMPROVEMENT

SUMMARY OF QUANTITIES

DATE: DECEMBER, 2002
PROJECT ID NO: 921573
SURVEY FILE NO.: 228
SHEET C-2 OF 26
FILE: QUANTITIES
VIEW: PLOT

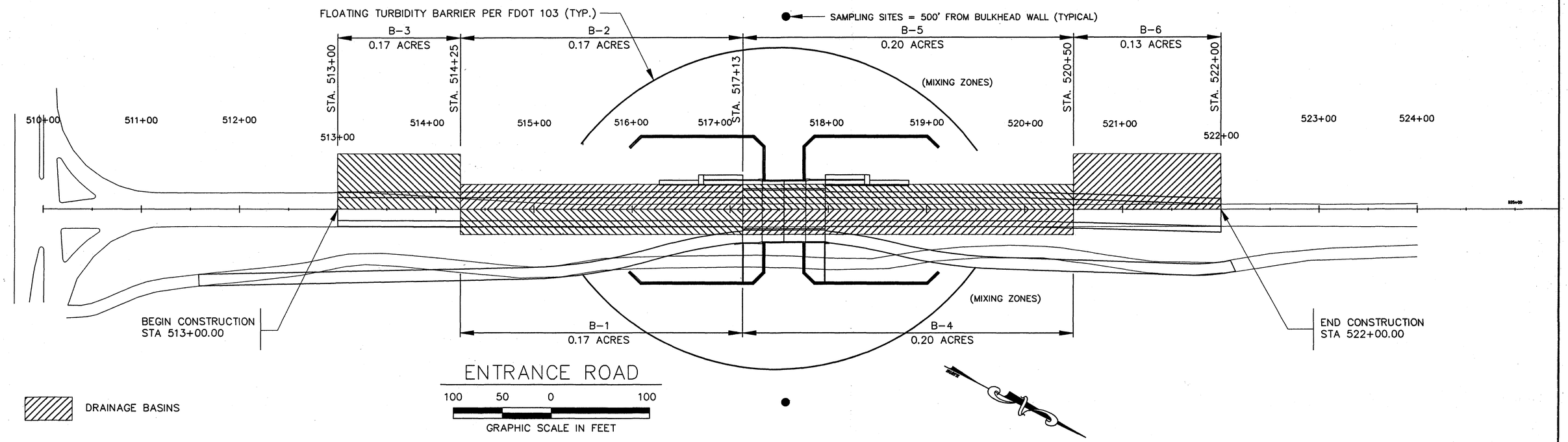

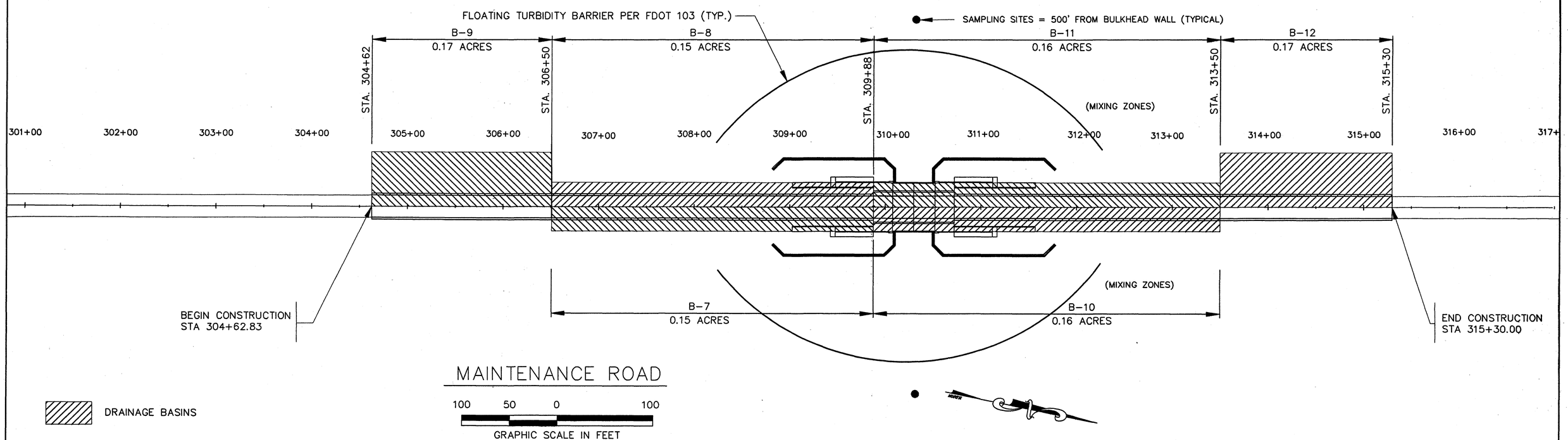

REVISIONS	BY	DATE

SURVEY BOOK No.: BK_PG		
SURVEY DIVISION	BY	DATE
SURVEYED		
TECHNICIAN		
CHECKED		
DESIGN DIVISION		
DESIGNED	GQB	10/02
DRAWN	GQB	10/02
CHECKED		

PINELLAS COUNTY, FLORIDA
Public Works

LAND SURVEY DIVISION
22211 U.S. HWY. 19 NORTH
CLEARWATER, FLORIDA 34625-2347
PHONE (727) 464-8904

ENGINEERING DEPARTMENT
440 COURT STREET
CLEARWATER, FLORIDA 34616
PHONE (727) 464-3251

TONY HORRNIK, FLORIDA REGISTERED PROFESSIONAL ENGINEER No. 41941 — DATE 02/22/03

FORT DESOTO
WATER CIRCULATION IMPROVEMENTS

DRAINAGE MAP

DATE: DECEMBER, 2002
PROJECT ID NO: 921573
SURVEY FILE NO.: N/A
SHEET C-3 OF 26
FILE:
VIEW:

GENERAL NOTES

1. All stations and offsets refer to construction reference line, unless otherwise noted.

2. Survey for this project was prepared by Pinellas County (Charles N. Gibson, Jr., P.L.S.).

3. Attention is directed to the fact that these plans may have been altered in size by reproduction. This must be considered when obtaining scaled data.

4. The Contractor shall field verify any and all existing conditions prior to commencing construction, and shall notify the Engineer promptly of any discrepancies.

5. The construction lengths indicated in these plans are approximate. Actual limits may be set in the field as directed by the Engineer.

6. Locations, elevations and dimensions of existing utilities, structures, and other features are shown according to the best information available at the time these drawings were prepared, but do not purport to be absolutely correct. The indicated location of underground utilities, structures, and facilities is approximate, and reflects the best information available from surveys and records. The Contractor shall be responsible for determining the exact size, location, depth, height, elevation, dimension, and extent of all underground and overhead facilities and other features affecting his work prior to proceeding with any construction activity that may affect such facilities. The Contractor shall be responsible for any damage caused by failure to comply with these instructions.

7. The Contractor must use extreme care in the installation of drainage structures and pipes, due to the close proximity of overhead and underground power lines.

8. The location of the proposed sidewalk, as shown on the plans, is for graphical orientation purposes only. Actual location of the proposed amenities is to be determined in the field utilizing the minimum standards depicted on the plans and the existing topography and physical features found in the field. The Contractor shall obtain approval from the Pinellas County Inspector / Engineer of the actual layout proposed prior to ordering of materials and / or commencement of work.

9. Separate payment shall be made only for the items of work listed and identified by appropriate pay item on the bid form. The cost of any related work not specifically identified, but which is required for satisfactory completion of the work, shall be considered to be included in the contract price for the appropriate bid item.

10. The Contractor's attention is directed to the fact that all construction activities shall conform to Pinellas County Code, Chapter 58, Environment, Article XII – Noise, Section 58-411 through 58-451.

11. The Contractor shall have a foreman, or responsible party, on site at all times when work is being performed. All workers on the job site will be courteous to the public at all times, and shall refer any questions or concerns to the Contractor's foreman or the County Inspector. The foreman shall speak and understand English and shall be available at all times for timely resolution of project-related issues.

12. Gravity Wall shall be constructed according to FDOT Index 520. Gravity walls shall be constructed of Class I structural concrete (3,000 PSI). Gravity walls constructed as extensions of reinforced concrete retaining walls, except walls of proprietary designs, shall have the same face texture and finish as the reinforced concrete retaining wall. Cost of reinforcing steel, face texture, finish and joint seal to be included in the contract unit price for Class I concrete (retaining walls C.Y.), reference FDOT Index 520.

13. Handrail shall be constructed according to FDOT Index 520. Handrail shall be 2-inch I.D. NPS Sch. 40 Aluminum pipe, pedestrian height unless specifically noted otherwise on the plans.

UTILITIES

14. Except where the plans and specifications provide that such work shall be performed under the contract for this project, all utilities interfering with construction shall be removed, relocated or adjusted by their owners, at their expense. The Contractor shall arrange his schedule to allow utility owners time for the necessary relocation and adjustment of utilities and related structures. The following owners have lines and facilities within the project area.

    1) Florida Power Corporation
    2) Verizon of Florida Inc. (Telecom)
    3) Pinellas County Utilities
    4) City of St. Petersburg
    5) Pinellas County Park Department

15. Above ground and / or underground utilities may be in the area of this project – proceed with caution – The Contractor shall call Sunshine State One Call and the Utility Owners in advance of beginning work, in accordance with Section 506, Florida Statutes. All utility owners may not be a member, requiring direct contact. The Contractor shall further coordinate with utility owners to resolve conflicts that may arise in the field during construction. The Contractor will be responsible for any utilities damaged as a result of the Contractor's failure to call "Sunshine One Call" and the Utility Owners.

16. The Contractor is required to coordinate with the utility owner(s) for the bracing of existing utility poles, in advance of excavation.

DRAINAGE & EROSION CONTROL

17. Station locations for storm drain inlets and manholes reference the center of the specified structure bottom. The proposed lengths of pipe shown on the plans are measured from the center of structure of each drainage structure.

18. Conflicts of water lines with sanitary or storm sewer systems are to be resolved by adjusting water lines as necessary.

19. No surfacing shall be applied to any manhole covers, frames, valve boxes, gas drops, etc. All existing and proposed utility and storm sewer structures whose tops will be exposed within any sidewalk or paved area shall be adjusted so that the top surface of covers or frames shall be flush with the pavement surface.

20. All existing and proposed utility and storm sewer structures whose tops will be exposed within unpaved areas subject to vehicular, bicycle, or pedestrian traffic shall be adjusted so that the top surface or covers or frames shall be no more than one inch above the finished grade. Where sod is applied, "finished grade" shall be the nominal height of grass after the sod is firmly placed.

21. All grates for ditch bottom inlets are to be hot dipped galvanized steel, after fabrication, per FDOT Index 232 and 233, and shall be designed for H-20 loading, and shall be secured to the structures per Pinellas County Standard Construction Details, Index 1295. All inlet structures shall be designed for H-20 loading. All ditch bottom inlets shall be modified with "Thin Wall Precast Options", as shown in FDOT Index 201, unless field conditions require cast in place structures.

22. All storm sewer inlet, manhole and junction box cover lids shall be fabricated and stamped as detailed in the Pinellas County Standard Construction Details, Index 1250, unless specified otherwise in the plans.

23. In accordance with FDOT Index 205 and FDOT Standard Specification 941, all proposed storm drain pipes will be reinforced concrete (RCP) Class III unless otherwise specified.

24. The Contractor shall be responsible for all erosion control and sediment control, in accordance with FDOT Index 102, throughout the duration of the project. Contractor shall be responsible for all site restoration efforts that may be required as a result of construction.

25. The Contractor shall use whatever methods, conforming to applicable standards, necessary to prevent erosion and siltation as may be required for the project.

26. The erosion control device quantities are estimates of the actual quantities that may be encountered during construction. It is the responsibility of the Contractor to specify actual quantities and costs associated with his specific erosion control implementation schedule. The erosion control items may be added or deleted from the pay item list as the erosion control implementation scheduled provided by the Contractor is modified to meet site specific conditions.

27. All erosion control fences, barriers, and siltation devices shall be erected prior to any land alterations, shall be maintained in good working order during construction, and removed following soil stabilization and final dressing. Built-up sediment will be removed from silt fence and staked turbidity barriers when it has reached one third the height of the fence. Stockpile areas shall include silt fence around the perimeter.

28. The Contractor shall provide silt barriers as directed by the Engineer to control erosion and sedimentation from taking place outside the limits of the project. The silt barriers shall be placed in accordance with the requirements of FDOT Index No. 102, or as directed by the Engineer. (Check reference to Index 102)

29. The Contractor shall not restrict or block the existing drainage flow overland or within the reshaped swales. Flow within existing drainage pipes shall be maintained at all times. Stormwater will be conveyed via the existing swales, ditches, proposed ditches, and existing and proposed storm sewer.

30. During the construction of drainage structures, and other structures requiring excavation, the Contractor shall place erosion control barriers around such structures to prevent erosion and the migration of sediment to points outside the construction area. The erosion control barriers shall be placed in accordance with the requirements of FDOT Index No. 102, or as directed by the Engineer.

31. During dewatering operations, the Contractor shall not discharge directly to receiving waters, existing conveyances to receiving waters, or wetland systems. Temporary sediment basins, traps, or siltation reduction devices shall be utilized to collect the discharge from dewatering activities to eliminate the potential for offsite sediment transport and direct discharge does not occur.

32. Contractor shall check all erosion and siltation control devices weekly, and after each rainfall, and repair and replace them as required. Maintenance and inspection of the control and abatement of erosion and water pollution control shall be included in the cost of pay items listed.

33. Banks shall be protected from erosion or collapse during construction. Bank protection material shall be carefully placed from the bank and not dumped from above in an uncontrolled manner. Erosion control fabric shall be used for erosion protection where sod will not hold or become established in time to protect the banks. Unless otherwise specified in the plans, upon completion of construction, all banks and waterways shall be restored to their pre-construction configuration and protected from erosion.

CLEARING & GRUBBING

34. Trees to be remove shall be paid for under the pay item Clearing and Grubbing.

35. Where excavation is required for construction of sidewalk, all stumps, roots, etc. shall be removed completely from the sidewalk area. All stumps within the project limits shall be removed completely and replaced with compacted backfill before the area is filled. Tree roots in area of proposed sidewalk, ramp, or driveway replacement shall be ground out to a depth of 6" below bottom of new sidewalk or driveway. All pruned root debris shall be removed from the sub-base material prior to pouring concrete, asphalt, or application of other specified materials. This work shall be included in and paid for under the pay item for Clearing and Grubbing.

36. All stumps, roots, and other debris projecting through or appearing on the surface of the ground shall be removed to a depth of 1-foot below the completed surface. This work shall be included in and paid for under the pay item for Clearing and Grubbing.

37. Trees and shrubs adjacent to the proposed sidewalk are to be trimmed to provide a minimum two-foot horizontal and nine-foot vertical clearance. This work shall be included in and paid for under the pay item for Clearing and Grubbing.

38. Materials interfering with construction, and all abandoned utility lines, pipes, structures, headwalls, endwalls, spillways, trees, stumps, roots, other debris, and subterranean objects to be removed, shall be disposed of as directed by the Engineer. This work shall be included in and paid for under the pay item for Clearing and Grubbing.

38. The Contractor shall remove all abandoned utility lines, pipes, structures and other subterranean objects to a minimum depth of four (4) feet below grade, or as otherwise directed by the Engineer. This work shall be included in and paid for under the pay item for Clearing and Grubbing.

EXCAVATION, GRADING

40. Any grading or construction depicted on the plans beyond the right-of-way and within the limits of construction is to be performed ONLY after receipt of permission from the property owner through a Right of Entry Agreement or a Sidewalk Easement. Only after notification by the Engineer that the Agreement / Easement has been obtained shall the Contractor construct within this area. Should the Engineer fail to obtain the proper authorization, the Contractor shall modify the construction limits to be kept within existing right-of-way as directed by the Engineer.

41. All sub-bases shall be of good, clean, acceptable material compacted to maximum density as determined by AASHTO T-99, in accordance with Florida Department of Transportation Standard Specifications for Road and Bridge Construction.

42. Unsuitable material shall become the property of the Contractor and shall be disposed of off site, at a suitable site provided by the Contractor.

43. Borrow material required for construction of the project shall be provided by the contractor from borrow areas provided by the contractor.

44. All excess materials resulting from excavation for pond construction of the project shall be disposed of by the contractor in areas provided by the contractor.

45. The Contractor shall provide all sheeting, shoring, and bracing required to protect adjacent structures or to minimize trench width. Where a separate pay item is not provided, the cost of all sheeting, shoring, and bracing required shall be included in the contract price for the item of work for which sheeting, shoring, and bracing is anticipated to be required.

SIDEWALK CONSTRUCTION

46. The Contractor shall disturb no more ground than what is necessary for construction. No open excavated trench, or other unsafe condition, will be left overnight. All work sites will be completely restored within seven (7) calendar days of the concrete pour for sidewalk. The intent of this provision is to "safe-up" the project site as work progresses, and shall include removing forms, filling holes, grading, and removal of debris.

47. Sidewalk shall be constructed according to FDOT Index 310, and sidewalk ramps shall be constructed according to FDOT Index 304, unless a separate detail is provided. Sidewalk ramps shall be constructed to a minimum thickness of six (6) inches and shall be reinforced with welded wire fabric. At each end of a curb cut, the Contractor will install an expansion joint.

48. At each job site, the Contractor will request a pre-pour inspection by the designated County Inspector. The Contractor shall not pour any concrete until a "pre-pour" inspection fully approves that all de-rooting and clearing and grubbing requirements, if any, are performed in accordance with this Specification, to verify that all form work is sufficient, and that the subgrade is cut to the proper depth and compacted properly. Work not in accordance with a County "post-pour" inspection may require the complete removal of rejected work or result in a reduced payment of the deliverable.

49. All sidewalk damaged during construction shall be replaced at the expense of the Contractor, at the direction of the Engineer.

SITE RESTORATION

50. All areas of exposed earth resulting from construction activities shall be sodded as directed by the Engineer. Seeding and mulching shall be applied only where specifically called for in the plans and specifications, or where specifically directed by the Engineer.

51. The Contractor will backfill areas to be sodded with clean fill to maintain proper grade of the planting area, and the sod shall be properly cut-in and tamped, the cost of which is included in the pay item for sod.

52. Sod stabilization shall occur within 72 hours of achieving final grade.

53. Water for sod shall be applied according to the FDOT Standard Specifications for Road and Bridge Construction, Section 575, and shall be paid for under the bid item for Sodding.

54. All existing and proposed utility and storm sewer structures whose tops will be exposed within unpaved areas subject to vehicular, bicycle or pedestrian traffic shall be adjusted so that the top surface of covers or frames shall be no more than one inch above the finished grade. Where sodding is applied "finished grade" shall be the nominal height of grass after the sod is firmly placed.

55. All proposed surfacing overlaid on existing pavement shall be feathered smoothly into the existing pavement.

MAINTENANCE OF TRAFFIC

56. The Contractor shall prepare and submit to the Engineer for review and approval, a traffic control plan including all signing and marking necessary, prior to the commencement of construction defining the procedures he will use to maintain access to the Park and Maintenance area in the park utilizing the proposed "Temporary Roadway" concepts defined in plans. The Contractor shall be responsible, throughout the duration of the project, for the construction, maintenance and removal of the "Temporary Roadways". "The Entrance Roadway" shall contain a bike path, minimum width six (6) foot, physically separated from the travel roadway.

57. The traffic control plan will indicate, but not limited to, signage markings, barricades, lights, detour routes (Temporary Roadways) and other items necessary to provide traffic control throughout the project duration. The Contractor shall provide continuous access during construction, with no road closure. The maintence of traffic shall include temporary roads utilizing areas created with sheet pilings.

58. The Contractor shall furnish, erect and maintain all necessary traffic control and safety devices, in accordance with the Federal Highway Administration "Manual on Uniform Traffic Control Devices" dated 2000, including current revisions and the Florida Department of Transportation "Roadway and Traffic Design Standards", dated 2000, as ammended by the specifications for this project.

59. The Contractor, seven (7) calendar days prior to commencing construction activity or prior to any change in construction activity affecting the traffic patterns, shall notify, in writting, the Park Manager. Said notice shall be approve by the Engineer.

60. Cost of maintenance of traffic, inclussive of the above items of work, shall be included in the lumpsum price of bid item 102-0101, Maintenance of Traffic.

REVISIONS	BY	DATE	SURVEY BOOK No.:		
			SURVEY DIVISION		
			SURVEYED		
			TECHNICIAN		
			CHECKED		
			DESIGN DIVISION		
			DESIGNED	GQB	10/02
			DRAWN	GQB	10/02
			CHECKED		

PINELLAS COUNTY, FLORIDA
Public Works

LAND SURVEY DIVISION
22211 U.S. HWY. 19 NORTH
CLEARWATER, FLORIDA 34625-2347
PHONE (727) 464-8904

ENGINEERING DEPARTMENT
440 COURT STREET
CLEARWATER, FLORIDA 34616
PHONE (727) 464-3251

TONY HORRNIK, FLORIDA REGISTERED PROFESSIONAL ENGINEER No. 41941 — DATE 02/22/02

FORT DESOTO
WATER CIRCULATION
IMPROVEMENT

GENERAL NOTES

DATE: DECEMBER, 2002
PROJECT ID NO: 921573
SURVEY FILE NO.: 228
SHEET C-4 OF 26
FILE: GEN_NOTES
VIEW: PLOT

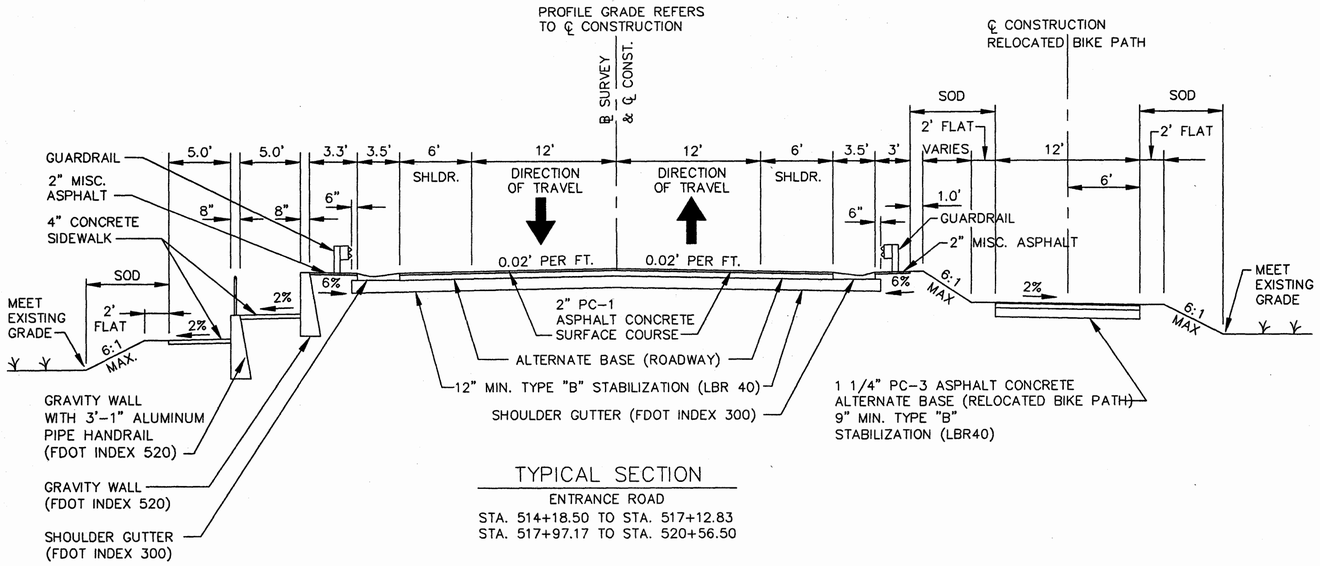

TYPICAL SECTION

ENTRANCE ROAD
STA. 514+18.50 TO STA. 517+12.83
STA. 517+97.17 TO STA. 520+56.50

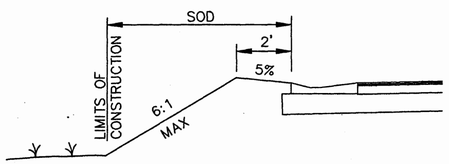

PARTIAL SECTION (RT. & LT.)

STA. 514+18.50 TO STA. 514+74.00
STA. 520+34.00 TO STA. 520+56.50

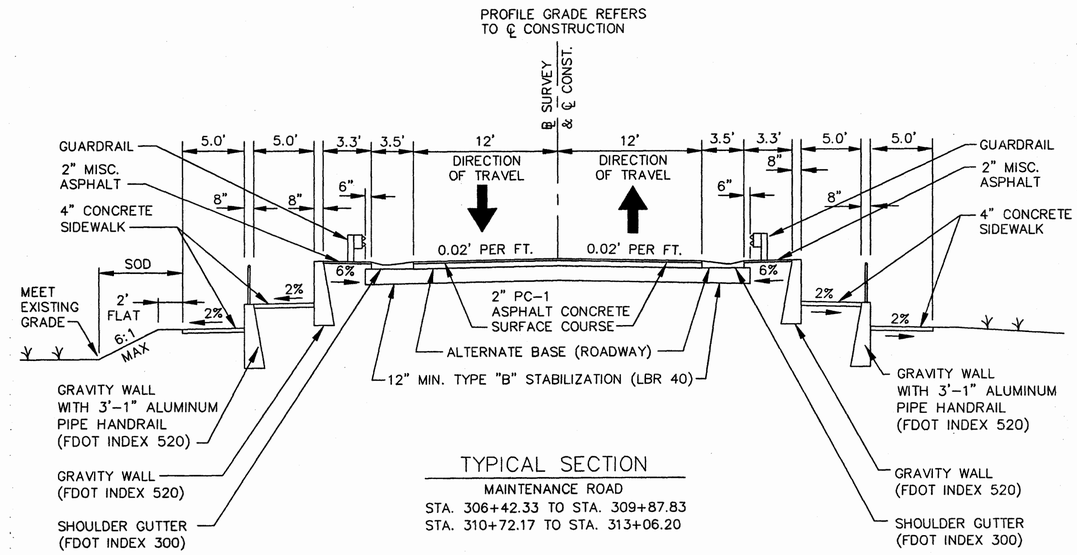

TYPICAL SECTION

MAINTENANCE ROAD
STA. 306+42.33 TO STA. 309+87.83
STA. 310+72.17 TO STA. 313+06.20

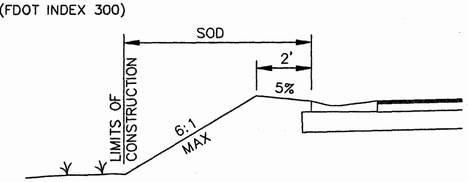

PARTIAL SECTION (RT. & LT.)

STA. 306+42.33 TO STA. 307+50.00
STA. 312+85.00 TO STA. 313+06.20

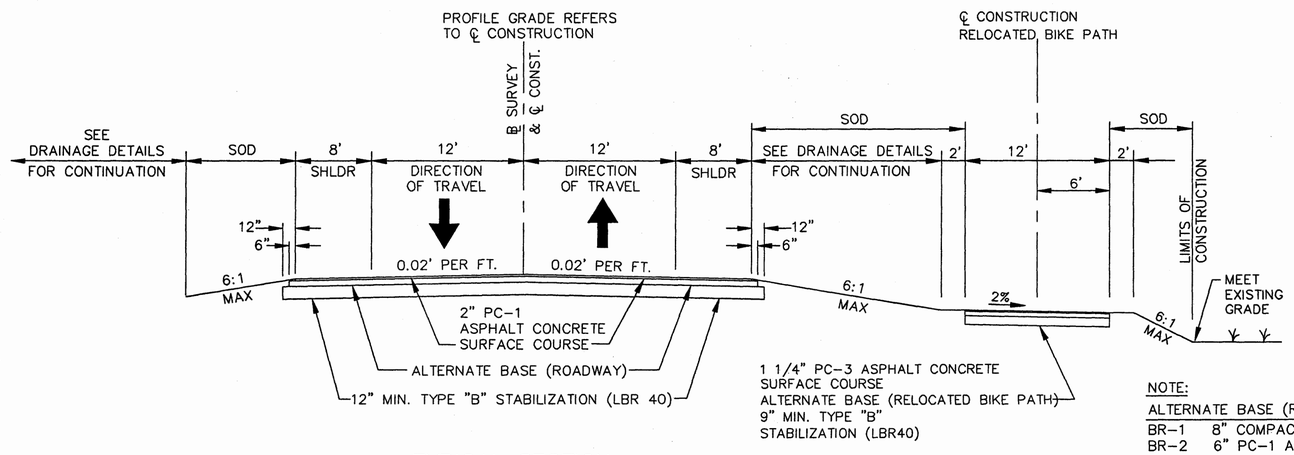

TYPICAL SECTION

ENTRANCE ROAD
STA. 513+00.00 TO STA. 514+18.50
STA. 520+56.50 TO STA. 522+00.00

NOTE:

ALTERNATE BASE (ROADWAY)

BR-1 8" COMPACTED CRUSHED CONCRETE/GRADED AGGREGATE BASE
BR-2 6" PC-1 ASPHALT BASE COURSE

ALTERNATE BASE (RELOCATED BIKE PATH)

BT-1 6" COMPACTED CRUSHED CONCRETE/GRADED AGGREGATE BASE
BT-2 4 1/2" PC-1 ASPHALT BASE COURSE

CONTRACTOR SHALL SELECT ONLY ONE BASE OPTION ON THE BID FORM

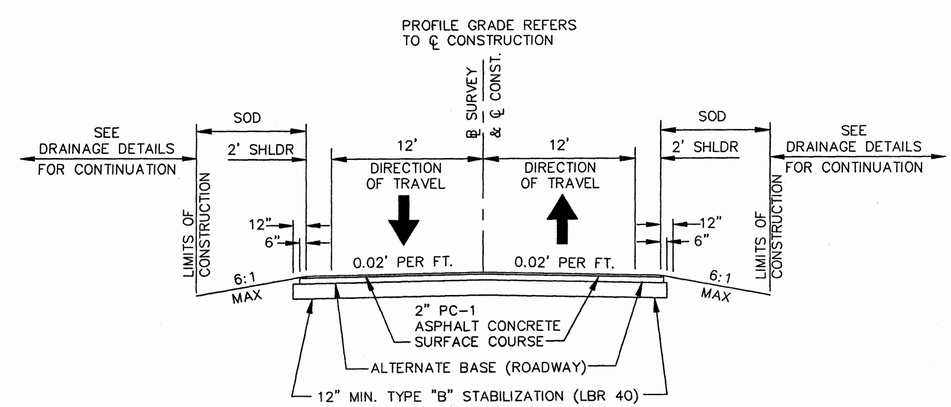

TYPICAL SECTION

MAINTENANCE ROAD
STA. 304+62.83 TO STA. 306+42.33
STA. 313+06.20 TO STA. 315+30.00

REVISIONS	BY	DATE

SURVEY BOOK No.: BK_PG		
SURVEY DIVISION	BY	DATE
SURVEYED		
TECHNICIAN		
CHECKED		
DESIGN DIVISION		
DESIGNED	SMB/GQB	10/01
DRAWN	SMB/GQB	10/01
CHECKED		

PINELLAS COUNTY, FLORIDA
Public Works

LAND SURVEY DIVISION
22211 U.S. HWY. 19 NORTH
CLEARWATER, FLORIDA 34625-2347
PHONE (727) 464-8904

ENGINEERING DEPARTMENT
440 COURT STREET
CLEARWATER, FLORIDA 34616
PHONE (727) 464-3251

TONY HORRNIK, FLORIDA REGISTERED PROFESSIONAL ENGINEER No. 41941 — DATE 02/26/03

FORT DESOTO
WATER CIRCULATION
IMPROVEMENT

TYPICAL SECTIONS

DATE: DECEMBER, 2002
PROJECT ID NO: 921573
SURVEY FILE NO.: N/A
SHEET C-5 OF 26
FILE: VIEW:

GENERAL NOTES

1. ALL WORK SHALL CONFORM TO THE REQUIREMENTS OF THESE PLANS AND SPECIFICATIONS
2. ALL SAFETY REGULATIONS AND PERMIT CONDITIONS ARE TO BE STRICTLY FOLLOWED.
3. THE CONTRACTOR SHALL PLACE CONSTRUCTION DEBRIS CONTROL DEVICES, BOOMS, TARPAULINS, FLOATS, STAGING, AND OTHER DEVICES AS NECESSARY AS TO PREVENT CONSTRUCTION DEBRIS FROM ENTERING THE WATER, AND AIR BORNE MATERIALS FROM LEAVING THE IMMEDIATE VICINITY OF THE SITE. THE CONTRACTOR SHALL BE RESPONSIBLE FOR CLEAN-UP OF ANY MATERIALS DEPOSITED OUTSIDE THE WORK AREA.
4. THE CONTRACTOR SHALL LOCATE AND MARK ALL UTILITIES WITHIN THE LIMITS OF CONSTRUCTION PRIOR TO COMMENCING WITH WORK.
5. DURING THE DREDGING, THE CONTRACTOR SHALL MONITOR THE TURBIDITY LEVELS TO ENSURE THAT PERMIT CONDITIONS ARE ADHERED TO DURING CONSTRUCTION AND THAT CONSTRUCTION METHODS ARE IN ACCORDANCE WITH THE PERMITS.
6. THE CONTRACTOR WILL BE RESPONSIBLE FOR ONGOING OBSERVATION FOR THE PRESENCE OF MANATEES IN THE DREDGING AREA. SEE PERMITS FOR DETAILS REGARDING MANATEE PROTECTION.

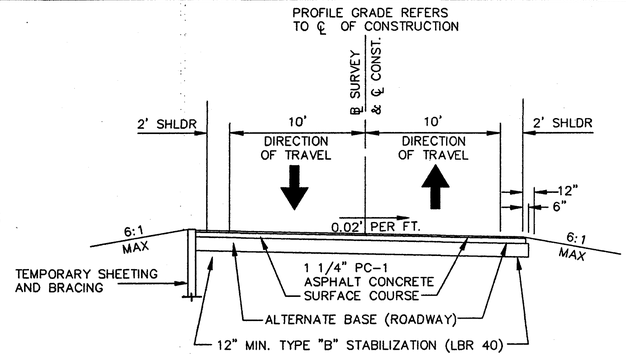

SECTION-TEMP. ENTRANCE ROADWAY(TYP.)
NOT TO SCALE

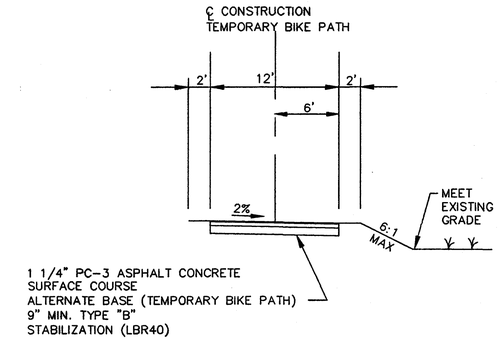

TYPICAL SECTION (N.T.S.)
TEMPORARY BIKE PATH

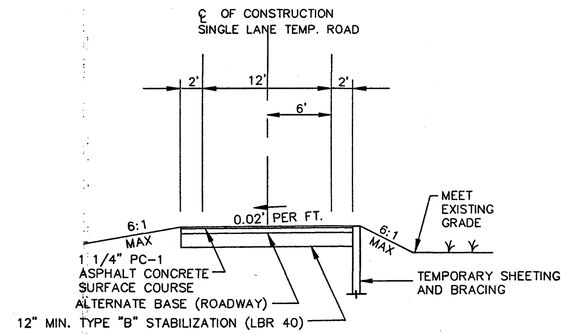

SECTION-TEMP. MAINTENANCE ROADWAY(TYP.)
NOT TO SCALE

NOTES:

1. ALTERNATE BASE (ROADWAY)
   BR-1 8" COMPACTED CRUSHED CONCRETE/GRADED AGGREGATE BASE
   BR-2 6" PC-1 ASPHALT BASE COURSE
2. ALTERNATE BASE (RELOCATED BIKE PATH)
   BT-1 6" COMPACTED CRUSHED CONCRETE/GRADED AGGREGATE BASE
   BT-2 4 1/2" PC-1 ASPHALT BASE COURSE
   CONTRACTOR SHALL SELECT ONLY ONE BASE OPTION ON THE BID FORM
3. PAYMENT FOR THE TEMPORARY ROADWAYS, AND TEMPORARY BIKEPATH, SHALL BE MADE UNDER PAYMENT ITEM 102-0100 MAINTENANCE OF TRAFFIC.

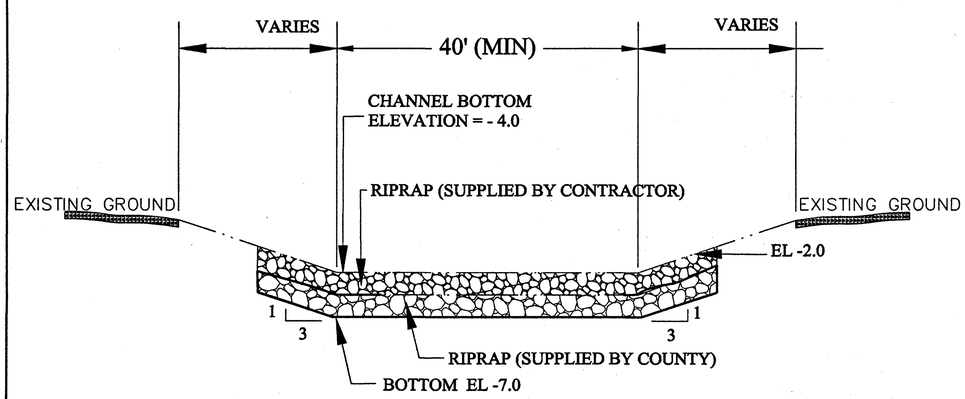

CHANNEL CROSS SECTION
(TYPICAL) NTS

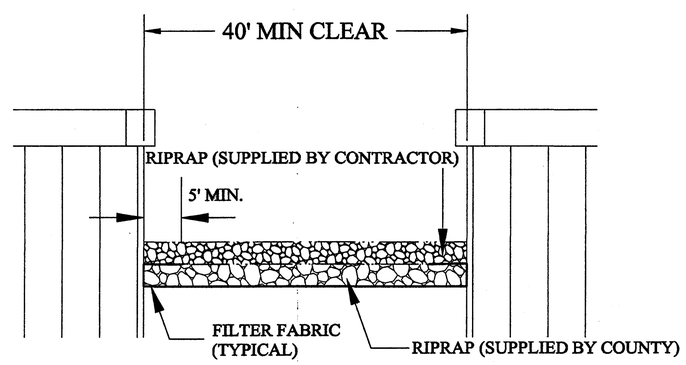

CHANNEL CROSS SECTION
AT BRIDGE/BULKHEAD
(TYPICAL) NTS

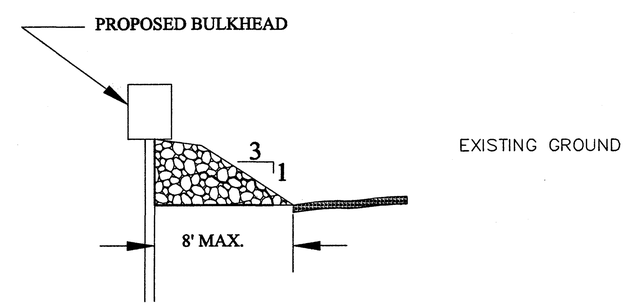

RUBBLE RIP RAP (NTS)
AT BULKHEAD DETAIL

REVISIONS	BY	DATE

SURVEY BOOK No.:		
SURVEY DIVISION	BY	DATE
SURVEYED		
TECHNICIAN		
CHECKED		
DESIGN DIVISION		
DESIGNED	SMB/GQB	10/01
DRAWN	SMB/GQB	
CHECKED	10/01	10/01

PINELLAS COUNTY, FLORIDA
Public Works

ENGINEERING DEPARTMENT
440 COURT STREET
CLEARWATER, FLORIDA 34616
PHONE (727) 464-3261

LAND SURVEY DIVISION
22211 U.S. HWY. 19 NORTH
CLEARWATER, FLORIDA 34625-2347
PHONE (727) 464-8904

TONY HORRNIK FLORIDA REGISTERED PROFESSIONAL ENGINEER No. 41941 DATE 03/03/03

FORT DESOTO
WATER CIRCULATION
IMPROVEMENTS

CHANNEL CONSTRUCTION
GENERAL NOTES &
TYPICAL SECTIONS

DATE: DECEMBER, 2002
PROJECT NO.: 921573
SURVEY FILE NO.: 228
SHEET C-6 OF 26
FILE: DESIGN1PC
VIEW: SECTION

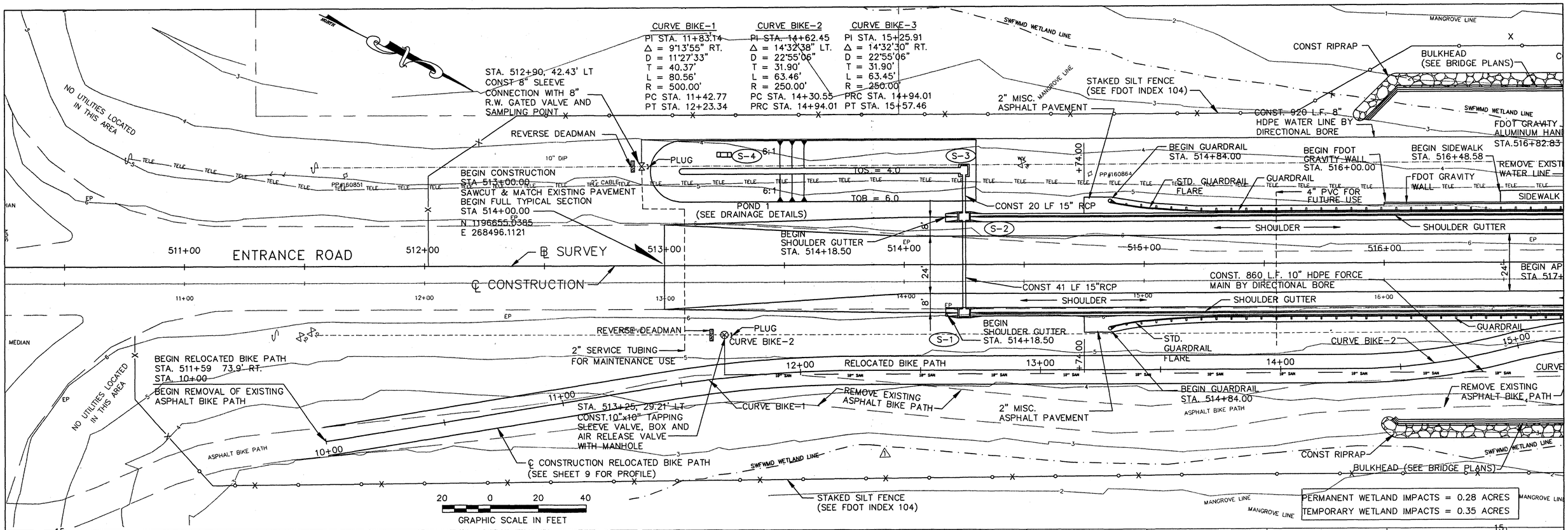

REVISIONS	BY	DATE

SURVEY BOOK No.:		
SURVEY DIVISION	BY	DATE
SURVEYED		
TECHNICIAN		
CHECKED		
DESIGN DIVISION		
DESIGNED	SMB/GQE	10/01
DRAWN	SMB/GQE	
CHECKED	10/01	10/01

PINELLAS COUNTY, FLORIDA
Public Works

ENGINEERING DEPARTMENT
440 COURT STREET
CLEARWATER, FLORIDA 34616
PHONE (727) 464-3251

LAND SURVEY DIVISION
22211 U.S. HWY. 19 NORTH
CLEARWATER, FLORIDA 34625-2347
PHONE (727) 464-8904

TONY HORRNIK FLORIDA REGISTERED PROFESSIONAL ENGINEER No. 41941 DATE 02/26/03

FORT DESOTO
WATER CIRCULATION IMPROVEMENTS

PLAN & PROFILE
ENTRANCE ROAD

DATE: DECEMBER, 2002
PROJECT NO.: 921573
SURVEY FILE NO.: 228
SHEET C-7 OF 26
FILE: DESIGN1PC
VIEW: EP&P1

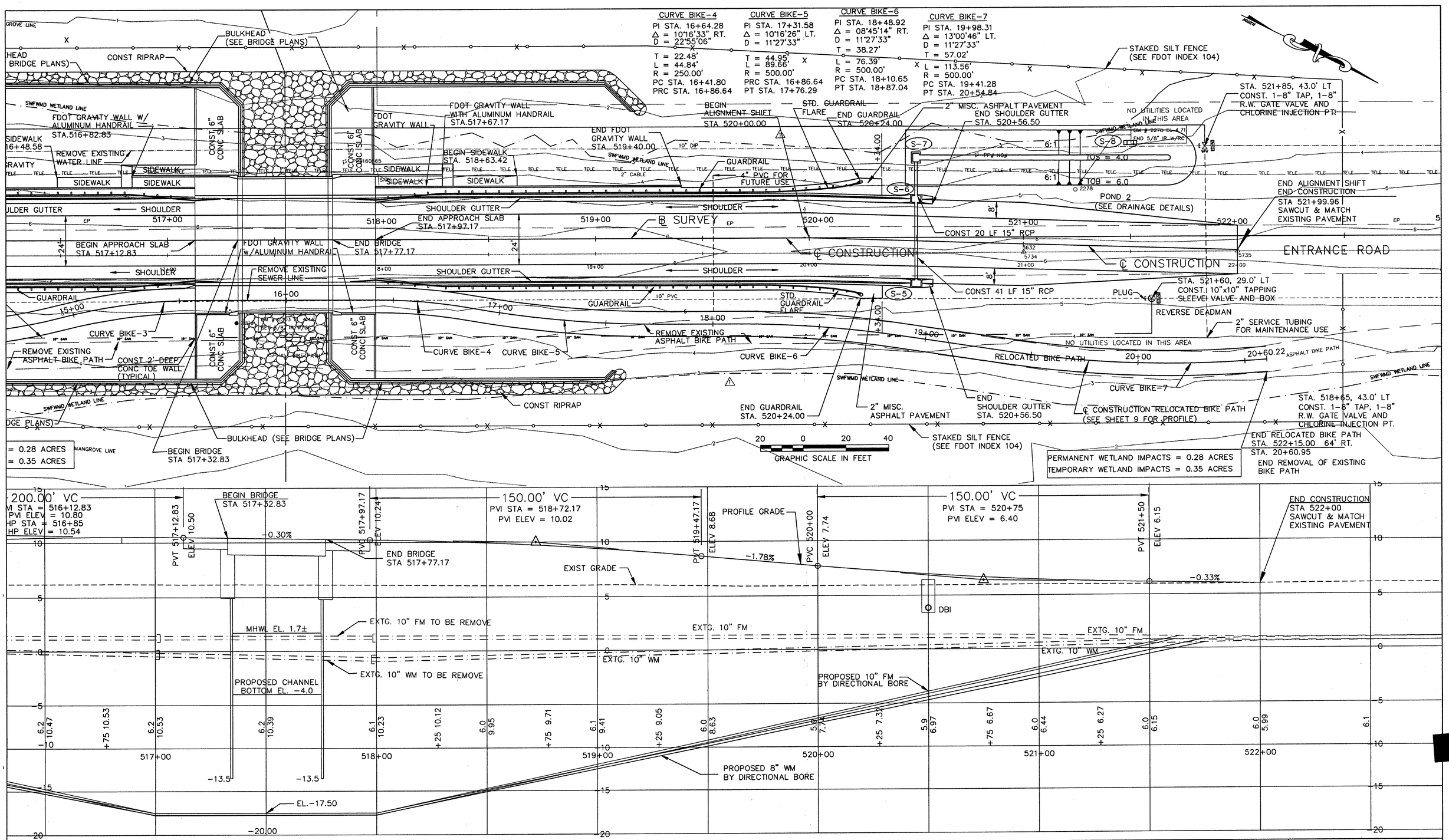

REVISIONS	BY	DATE

SURVEY BOOK No.:		
SURVEY DIVISION	BY	DATE
SURVEYED		
TECHNICIAN		
CHECKED		
DESIGN DIVISION		
DESIGNED	SMB/GQB	10/01
DRAWN	SMB/GQB	
CHECKED	10/01	10/01

PINELLAS COUNTY, FLORIDA
Public Works

ENGINEERING DEPARTMENT
440 COURT STREET
CLEARWATER, FLORIDA 34616
PHONE (727) 464-3261

LAND SURVEY DIVISION
22211 U.S. HWY. 19 NORTH
CLEARWATER, FLORIDA 34625-2347
PHONE (727) 464-8904

TONY HORRNIK — FLORIDA REGISTERED PROFESSIONAL ENGINEER No. 41941 — DATE 02/26/03

FORT DESOTO WATER CIRCULATION IMPROVEMENTS

PLAN & PROFILE ENTRANCE ROAD

DATE: DECEMBER, 2002
PROJECT NO.: 921573
SURVEY FILE NO.: 228
SHEET C-8 OF 26
FILE: DESIGN1PC
VIEW: EP&P2

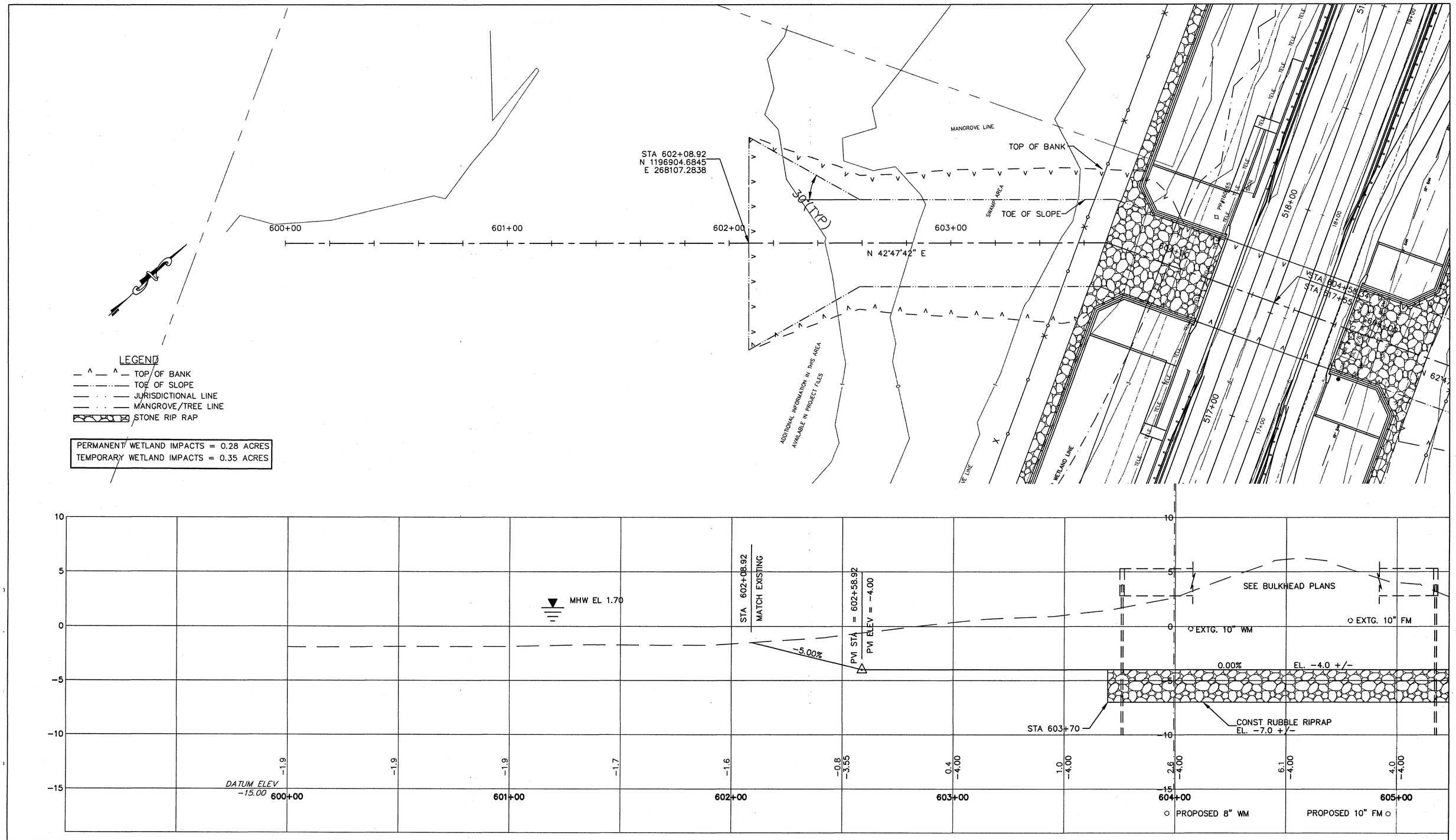

REVISIONS	BY	DATE

SURVEY BOOK No.:		
SURVEY DIVISION	BY	DATE
SURVEYED		
TECHNICIAN		
CHECKED		
DESIGN DIVISION		
DESIGNED	SMB/GQB	10/01
DRAWN	SMB/GQB	
CHECKED	10/01	10/01

PINELLAS COUNTY, FLORIDA
Public Works

ENGINEERING DEPARTMENT
440 COURT STREET
CLEARWATER, FLORIDA 34616
PHONE (727) 464-3251

LAND SURVEY DIVISION
22211 U.S. HWY. 19 NORTH
CLEARWATER, FLORIDA 34625-2347
PHONE (727) 464-6904

02/26/02
TONY HORRNIK FLORIDA REGISTERED PROFESSIONAL ENGINEER No.41941 DATE

FORT DESOTO
WATER CIRCULATION IMPROVEMENTS

PLAN & PROFILE
ENTRANCE CHANNEL

DATE: DECEMBER, 2002
PROJECT NO.: 921573
SURVEY FILE NO.: 228
SHEET C-9 OF 26
FILE: DESIGN1PC
VIEW: CHAN EP&P2

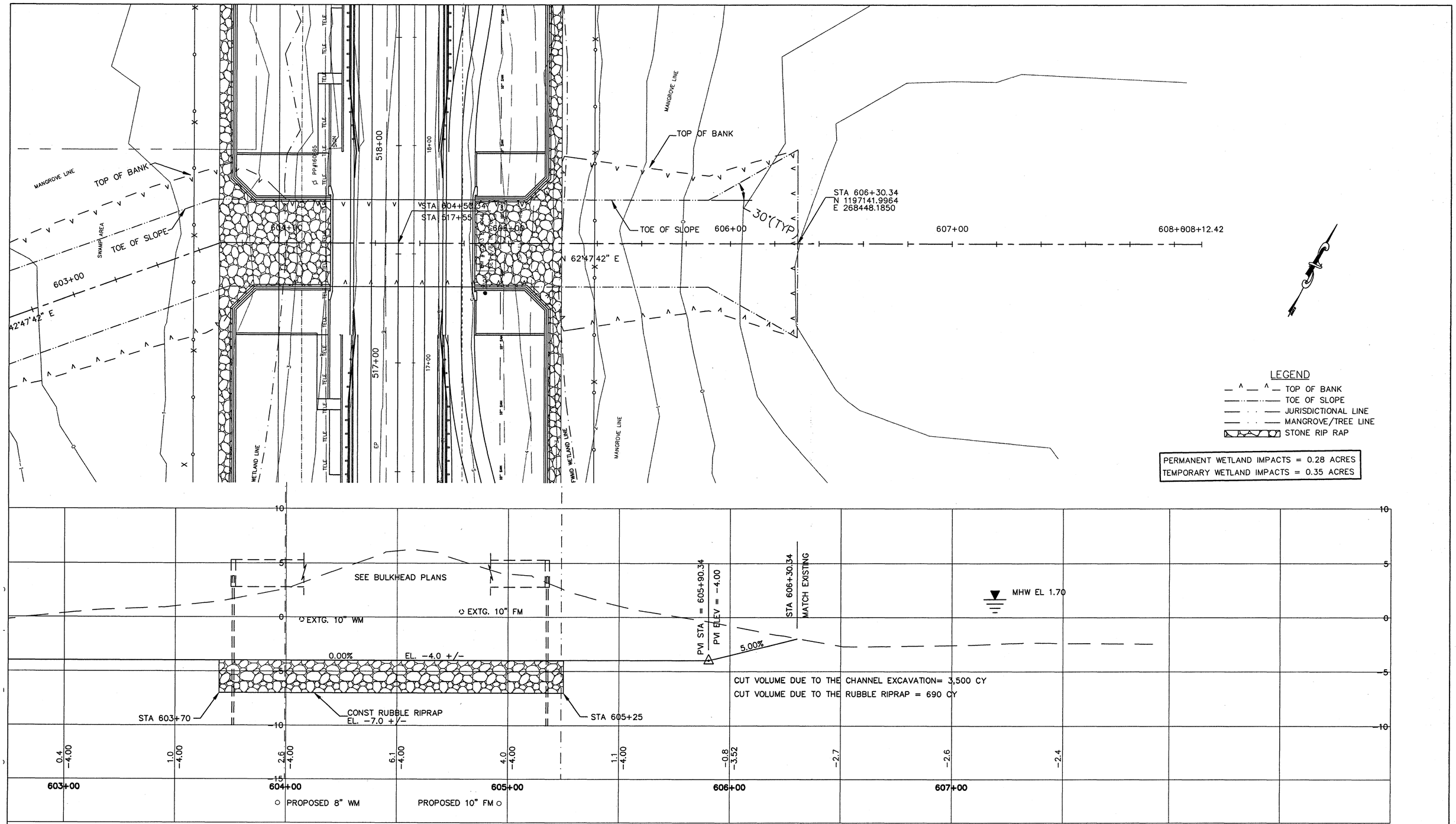

REVISIONS	BY	DATE

SURVEY BOOK No.:		
SURVEY DIVISION	BY	DATE
SURVEYED		
TECHNICIAN		
CHECKED		
DESIGN DIVISION		
DESIGNED	SMB/GQB	10/01
DRAWN	SMB/GQB	
CHECKED	10/01	10/01

PINELLAS COUNTY, FLORIDA
Public Works

ENGINEERING DEPARTMENT
440 COURT STREET
CLEARWATER, FLORIDA 34616
PHONE (727) 464-3261

LAND SURVEY DIVISION
22211 U.S. HWY. 19 NORTH
CLEARWATER, FLORIDA 34625-2347
PHONE (727) 464-8904

TONY HORRNIK — FLORIDA REGISTERED PROFESSIONAL ENGINEER No. 41941 — DATE 02/26/03

FORT DESOTO WATER CIRCULATION IMPROVEMENTS

PLAN & PROFILE ENTRANCE CHANNEL

DATE: DECEMBER, 2002
PROJECT NO.: 921573
SURVEY FILE NO.: 228
SHEET C10 OF 26
FILE: DESIGN1PC
VIEW: CHAN EP&P2

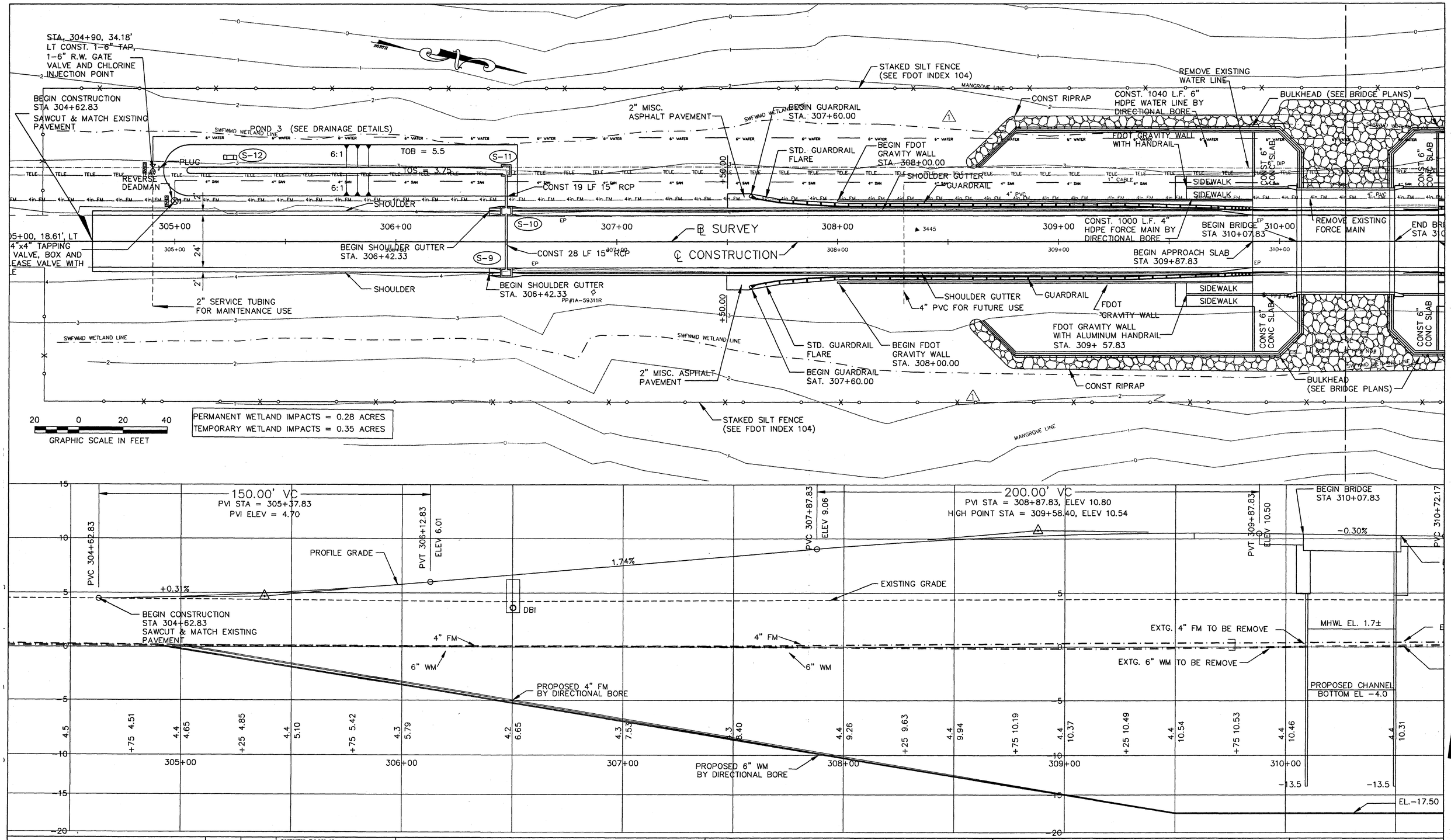

REVISIONS	BY	DATE

SURVEY BOOK No.:		
SURVEY DIVISION	BY	DATE
SURVEYED		
TECHNICIAN		
CHECKED		
DESIGN DIVISION		
DESIGNED	SMB/GQB	10/01
DRAWN	SMB/GQB	
CHECKED	10/01	10/01

PINELLAS COUNTY, FLORIDA
Public Works

ENGINEERING DEPARTMENT
440 COURT STREET
CLEARWATER, FLORIDA 34616
PHONE (727) 464-3251

LAND SURVEY DIVISION
22211 U.S. HWY. 19 NORTH
CLEARWATER, FLORIDA 34625-2347
PHONE (727) 464-8904

TONY HORRNIK — FLORIDA REGISTERED PROFESSIONAL ENGINEER No. 41941 — DATE 02/22/03

FORT DESOTO WATER CIRCULATION IMPROVEMENTS

PLAN & PROFILE MAINTENANCE ROAD

DATE: DECEMBER, 2002
PROJECT NO.: 921573
SURVEY FILE NO.: 228
SHEET C11 OF 26
FILE: DESIGN1PC
VIEW: MP&P1

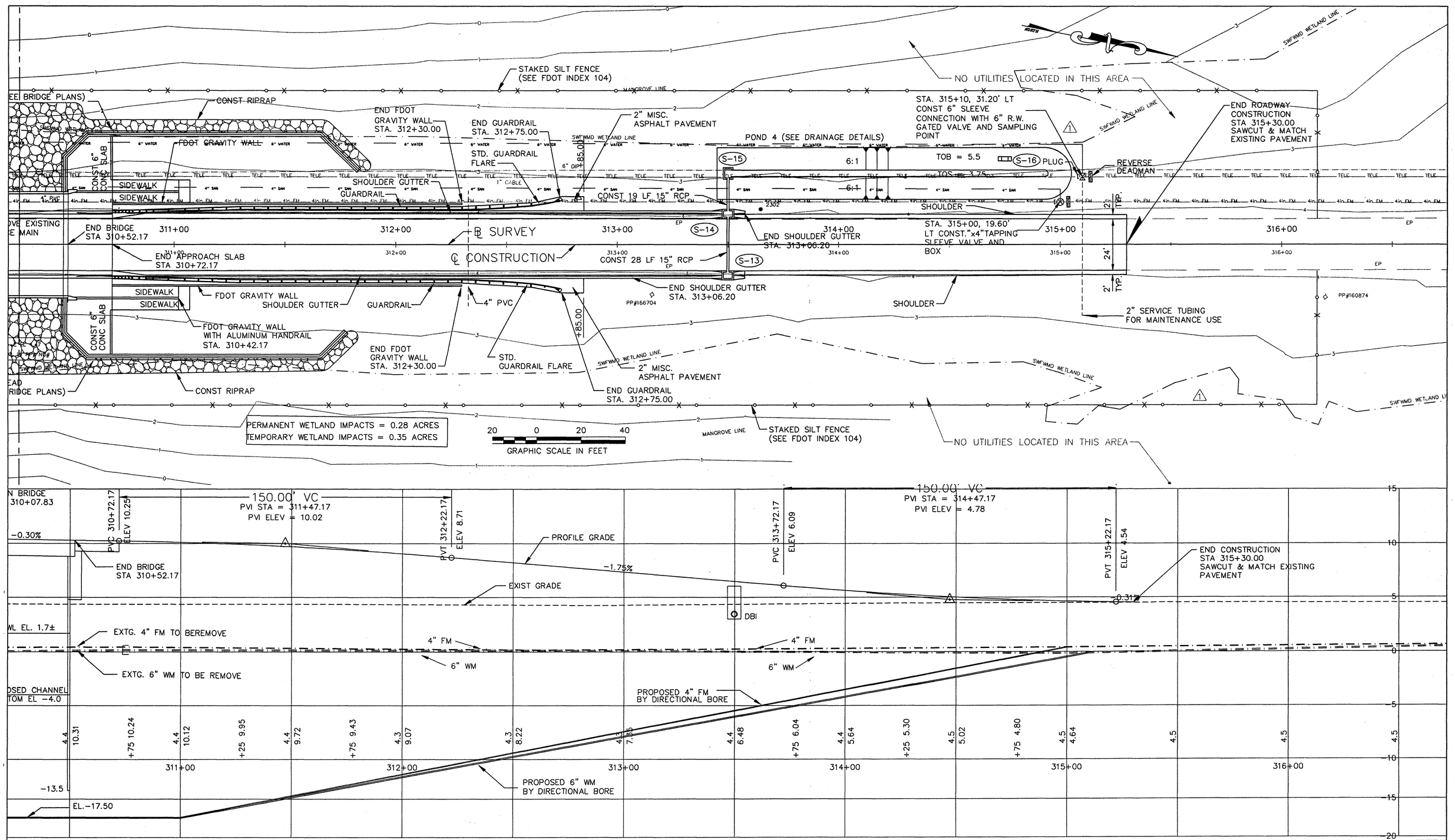

REVISIONS	BY	DATE

SURVEY BOOK No.:		
SURVEY DIVISION	BY	DATE
SURVEYED		
TECHNICIAN		
CHECKED		
DESIGN DIVISION		
DESIGNED	SMB/GQB	10/01
DRAWN	SMB/GQB	
CHECKED	10/01	10/01

PINELLAS COUNTY, FLORIDA
Public Works

ENGINEERING DEPARTMENT
440 COURT STREET
CLEARWATER, FLORIDA 34616
PHONE (727) 464-3251

LAND SURVEY DIVISION
22211 U.S. HWY. 19 NORTH
CLEARWATER, FLORIDA 34625-2347
PHONE (727) 464-6904

TONY HORRNIK — FLORIDA REGISTERED PROFESSIONAL ENGINEER No.41941 — DATE 02/26/03

FORT DESOTO WATER CIRCULATION IMPROVEMENTS

PLAN & PROFILE MAINTENANCE ROAD

DATE: DECEMBER, 2002
PROJECT NO.: 921573
SURVEY FILE NO.: 228
SHEET C12 OF 26
FILE: DESIGN1PC
VIEW: MP&P2

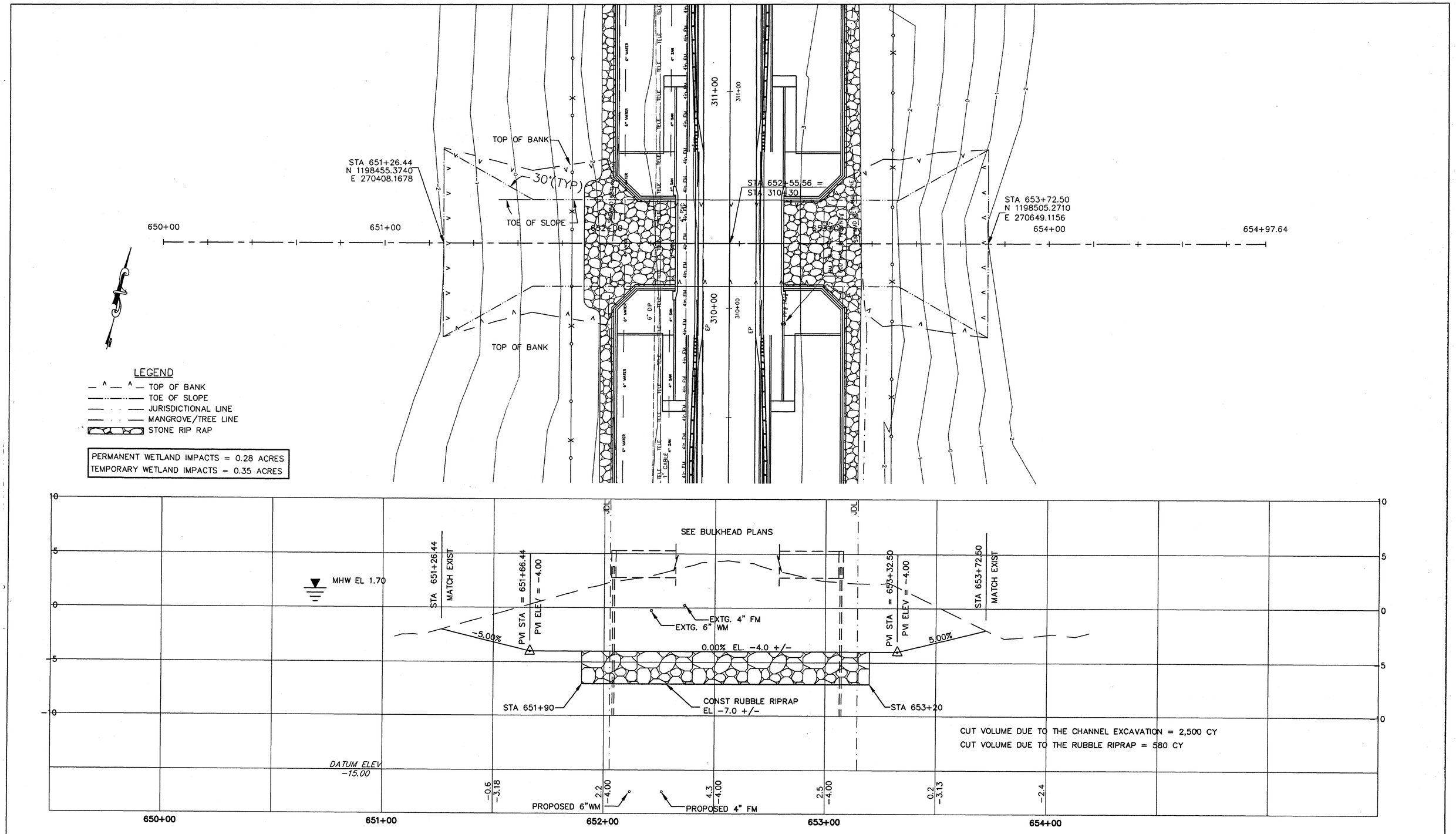

REVISIONS	BY	DATE

SURVEY BOOK No.:		
SURVEY DIVISION	BY	DATE
SURVEYED		
TECHNICIAN		
CHECKED		
DESIGN DIVISION		
DESIGNED	SMB/GQB	10/01
DRAWN	SMB/GQB	
CHECKED	10/01	10/01

PINELLAS COUNTY, FLORIDA
Public Works

ENGINEERING DEPARTMENT
440 COURT STREET
CLEARWATER, FLORIDA 34616
PHONE (727) 464-3251

LAND SURVEY DIVISION
22211 U.S. HWY. 19 NORTH
CLEARWATER, FLORIDA 34625-2347
PHONE (727) 464-8904

TONY HORRNIK FLORIDA REGISTERED PROFESSIONAL ENGINEER No. 41941 DATE 02/26/03

FORT DESOTO
WATER CIRCULATION IMPROVEMENTS

PLAN & PROFILE
MAINTENANCE CHANNEL

DATE: DECEMBER, 2002
PROJECT NO.: 921573
SURVEY FILE NO.: 228
SHEET C13 OF 26
FILE: DESIGN1PC
VIEW: CHAN MP&P1

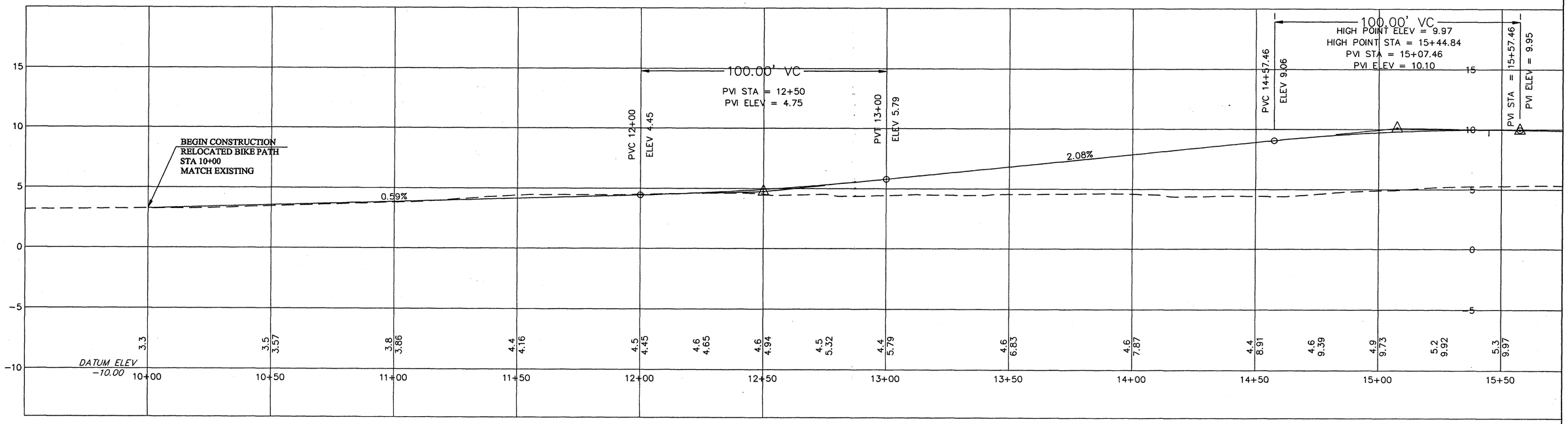

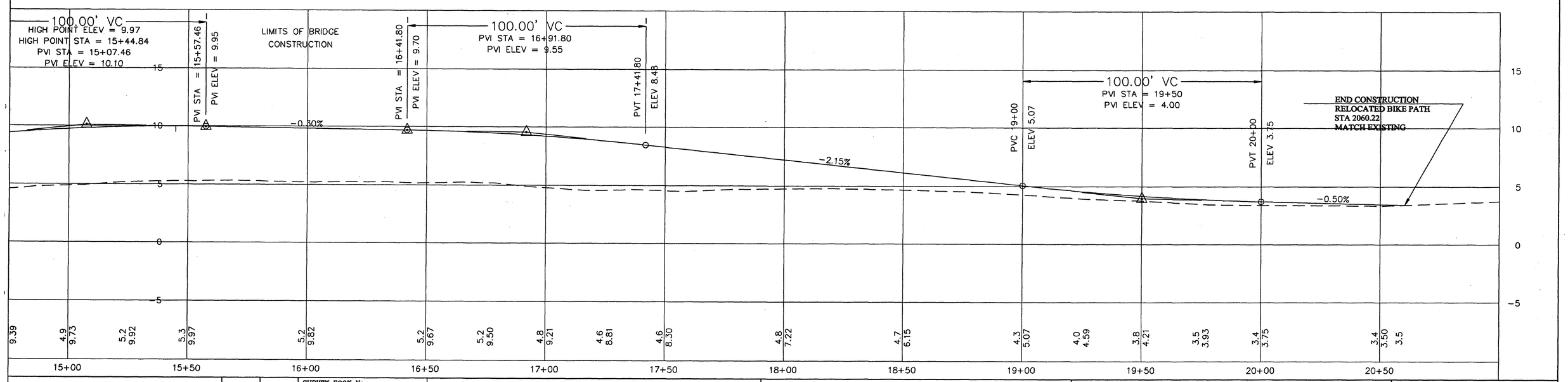

REVISIONS	BY	DATE

SURVEY BOOK No.:		
SURVEY DIVISION	BY	DATE
SURVEYED		
TECHNICIAN		
CHECKED		
DESIGN DIVISION		
DESIGNED	SMB/GGB	10/01
DRAWN	SMB/GGB	
CHECKED	10/01	10/01

PINELLAS COUNTY, FLORIDA
Public Works

ENGINEERING DEPARTMENT
440 COURT STREET
CLEARWATER, FLORIDA 34616
PHONE (727) 464-3251

LAND SURVEY DIVISION
22211 U.S. HWY. 19 NORTH
CLEARWATER, FLORIDA 34625-2347
PHONE (727) 464-6904

TONY HORRNIK — FLORIDA REGISTERED PROFESSIONAL ENGINEER No. 41941 — DATE 02/26/03

FORT DESOTO
WATER CIRCULATION IMPROVEMENTS

PROFILE
RELOCATED TRAIL

DATE: DECEMBER, 2002
PROJECT NO.: 921573
SURVEY FILE NO.: 228
SHEET C14 OF 26
FILE: DESIGN1PC
VIEW: TRAIL 1&2

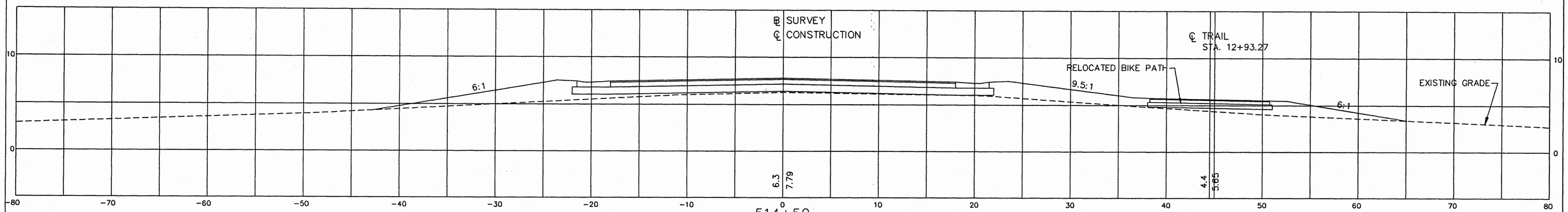

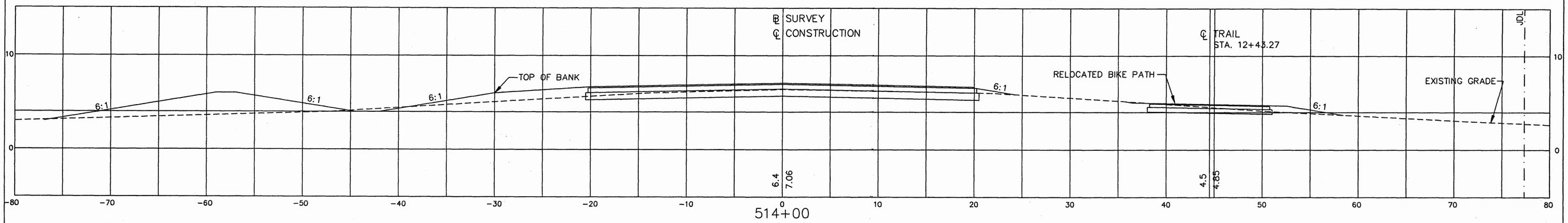

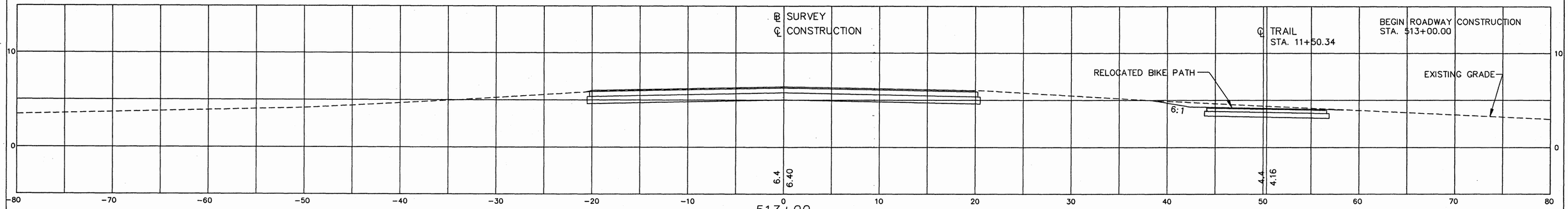

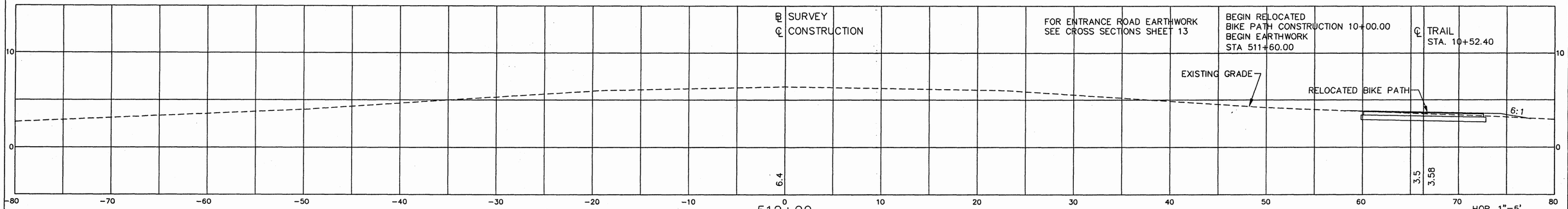

SCALES: HOR. 1"=5'
VER. 1"=5'

REVISIONS	BY	DATE

SURVEY BOOK No.: BK_PG		
SURVEY DIVISION	BY	DATE
SURVEYED		
TECHNICIAN		
CHECKED		
DESIGN DIVISION		
DESIGNED	SMB/CQB	10/01
DRAWN	SMB/CQB	10/01
CHECKED		

PINELLAS COUNTY, FLORIDA
Public Works

LAND SURVEY DIVISION
22211 U.S. HWY. 19 NORTH
CLEARWATER, FLORIDA 34625-2347
PHONE (727) 464-8904

ENGINEERING DEPARTMENT
440 COURT STREET
CLEARWATER, FLORIDA 34616
PHONE (727) 464-3251

02/26/03
TONY HORRNIK, FLORIDA REGISTERED PROFESSIONAL ENGINEER No. 41941 DATE

FORT DESOTO WATER CIRCULATION IMPROVEMENTS

CROSS SECTIONS ENTRANCE ROAD

DATE: DECEMBER, 2002
PROJECT ID NO: 921573
SURVEY FILE NO.: 228
SHEET C-15 OF 26
FILE:
VIEW:

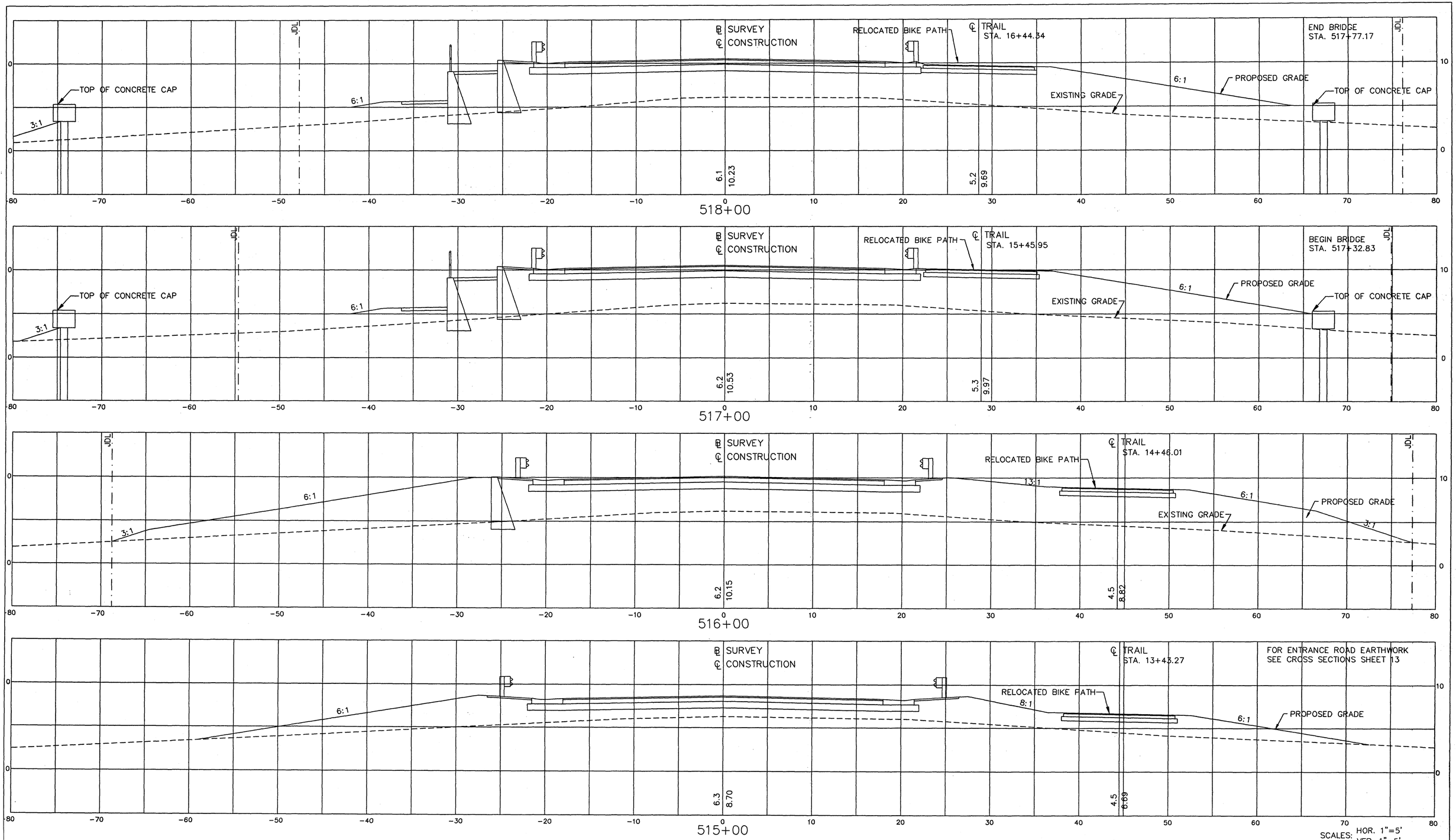

REVISIONS	BY	DATE

SURVEY BOOK No.: BK_PG		
SURVEY DIVISION	BY	DATE
SURVEYED		
TECHNICIAN		
CHECKED		
DESIGN DIVISION		
DESIGNED	SMB/CQB	10/01
DRAWN	SMB/CQB	10/01
CHECKED		

PINELLAS COUNTY, FLORIDA
Public Works

LAND SURVEY DIVISION
22211 U.S. HWY. 19 NORTH
CLEARWATER, FLORIDA 34625-2347
PHONE (727) 464-8904

ENGINEERING DEPARTMENT
440 COURT STREET
CLEARWATER, FLORIDA 34616
PHONE (727) 464-3251

02/25/03
TONY HORRNIK, FLORIDA REGISTERED PROFESSIONAL ENGINEER No. 41941 DATE

FORT DESOTO
WATER CIRCULATION IMPROVEMENTS

CROSS SECTIONS
ENTRANCE ROAD

DATE:DECEMBER, 2002

PROJECT ID NO: 921573

SURVEY FILE NO.: 228

SHEET C-16 OF 26

FILE:
VIEW:

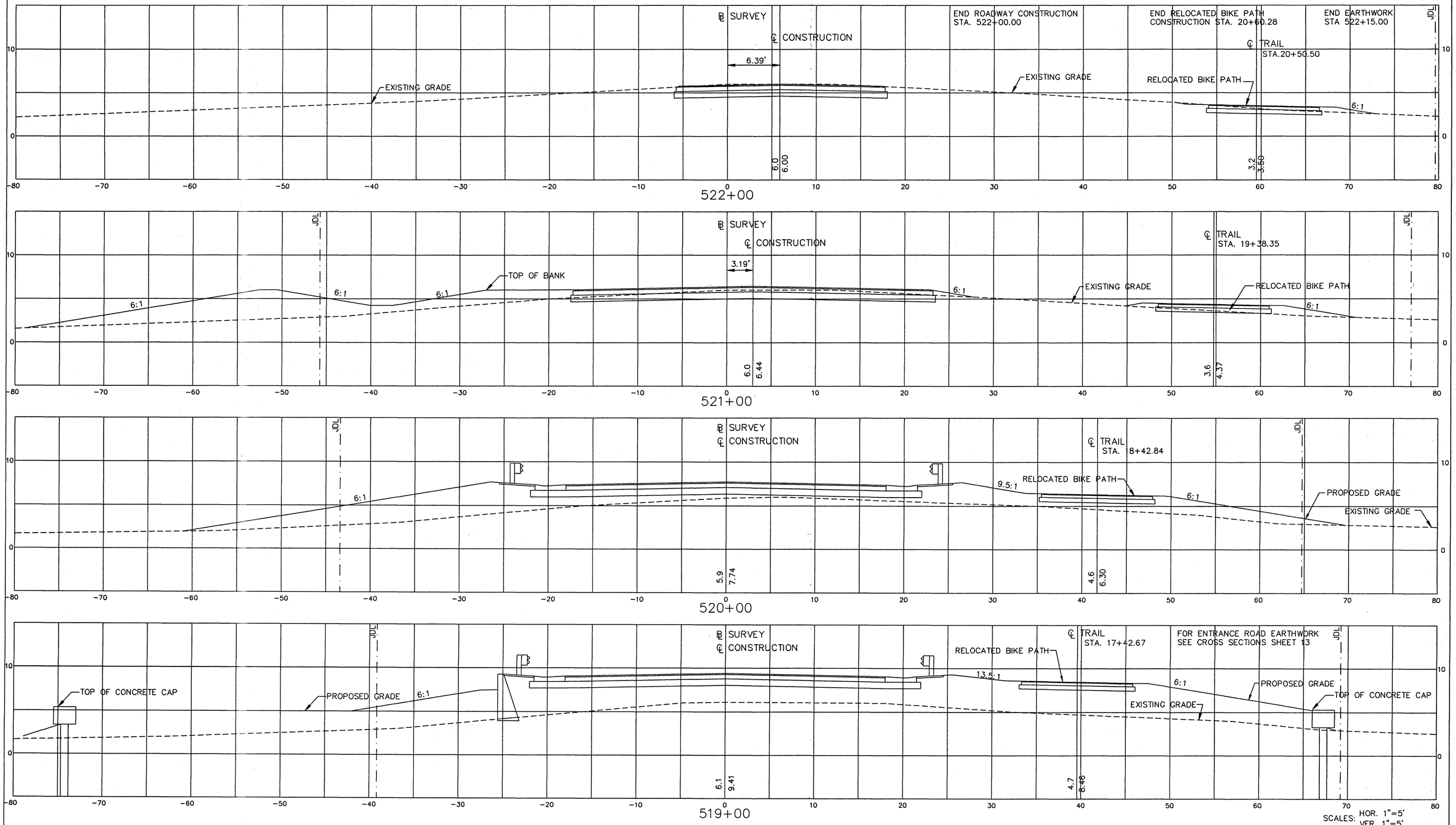

REVISIONS	BY	DATE

SURVEY BOOK No.: BK_PG		
SURVEY DIVISION	BY	DATE
SURVEYED		
TECHNICIAN		
CHECKED		
DESIGN DIVISION		
DESIGNED	SMB/GQB	10/01
DRAWN	SMB/GQB	10/01
CHECKED		

PINELLAS COUNTY, FLORIDA
Public Works

LAND SURVEY DIVISION
22211 U.S. HWY. 19 NORTH
CLEARWATER, FLORIDA 34625-2347
PHONE (727) 464-8904

ENGINEERING DEPARTMENT
440 COURT STREET
CLEARWATER, FLORIDA 34616
PHONE (727) 464-3251

TONY HORRNIK, FLORIDA REGISTERED PROFESSIONAL ENGINEER No. 41941 — 02/25/03 DATE

FORT DESOTO
WATER CIRCULATION IMPROVEMENTS

CROSS SECTIONS
ENTRANCE ROAD

DATE: DECEMBER, 2002
PROJECT ID NO: 921573
SURVEY FILE NO.: 228
SHEET C-17 of 26
FILE:
VIEW:

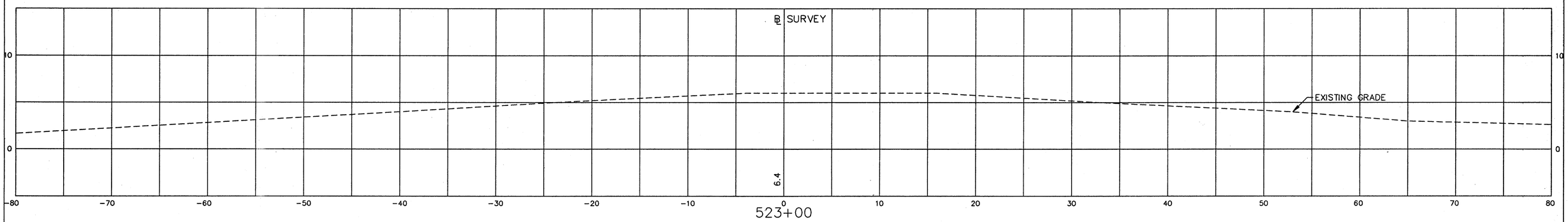

ENTRANCE ROAD SUMMARY OF EARTHWORK				
	CUT	CUT	FILL	FILL
STA.	AREA(SF)	VOLUME(CY)	AREA(SF)	VOLUME(CY)
511+60.00	17.60	26.08	1.02	1.51
512+00.00	17.60	423.30	1.02	1.89
513+00.00	96.69	289.43	0.00	108.19
514+00.00	59.60	55.19	58.42	116.57
514+50.00	0.00	0.00	67.47	254.26
515+00.00	0.00	4,23	207.13	1191.26
516+00.00	2.28	13.15	436.15	1562.80
517+00.00	4.00	14.82	407.76	1537.60
518+00.00	4.00	9.26	422.54	1474.00
519+00.00	1.00	1.86	373.45	1014.33
520+00.00	0.00	70.89	174.29	523.04
521+00.00	38.27	90.26	108.15	204.76
522+00.00	29.60		2.42	
	SUBTOTAL =	998.47	SUBTOTAL =	7990.21

NOTE:

THE ESTIMATED VOLUMES PROVIDED DOES NOT INCLUDE PERCENT SWELL / PERCENT SHRINKAGE OF MATERIALS.

SCALES: HOR. 1"=5' VER. 1"=5'

REVISIONS	BY	DATE

SURVEY BOOK No.: BK_PG

SURVEY DIVISION	BY	DATE
SURVEYED		
TECHNICIAN		
CHECKED		
DESIGN DIVISION		
DESIGNED	SMB/GQB	10/01
DRAWN	SMB/GQB	10/01
CHECKED		

PINELLAS COUNTY, FLORIDA
Public Works

LAND SURVEY DIVISION
22211 U.S. HWY. 19 NORTH
CLEARWATER, FLORIDA 34625-2347
PHONE (727) 464-8904

ENGINEERING DEPARTMENT
440 COURT STREET
CLEARWATER, FLORIDA 34616
PHONE (727) 464-3251

TONY HORRNIK, FLORIDA REGISTERED PROFESSIONAL ENGINEER No. 41941 — DATE 02/25/03

FORT DESOTO
WATER CIRCULATION
IMPROVEMENTS

CROSS SECTIONS
ENTRANCE ROAD

DATE: DECEMBER, 2002
PROJECT ID NO: 921573
SURVEY FILE NO.: 228
SHEET C-18 OF 26
FILE:
VIEW:

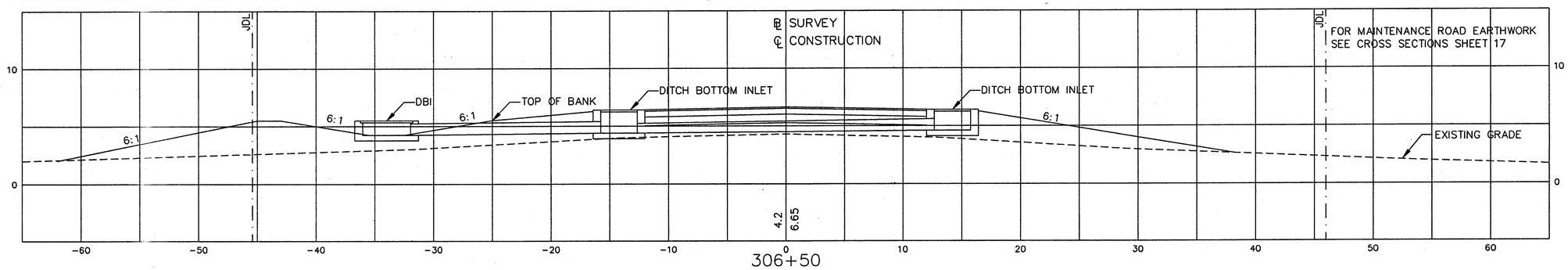

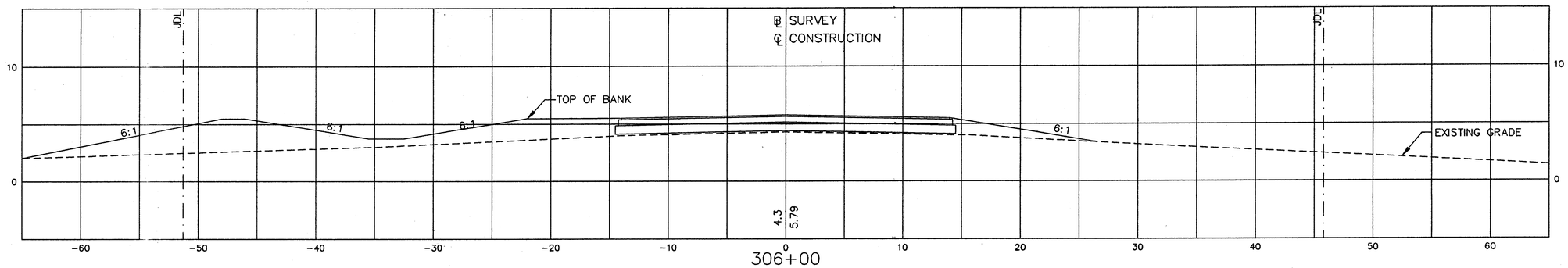

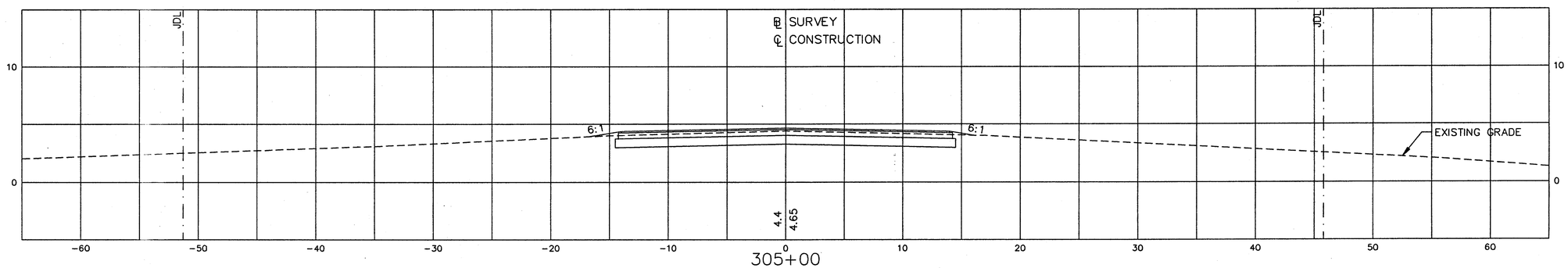

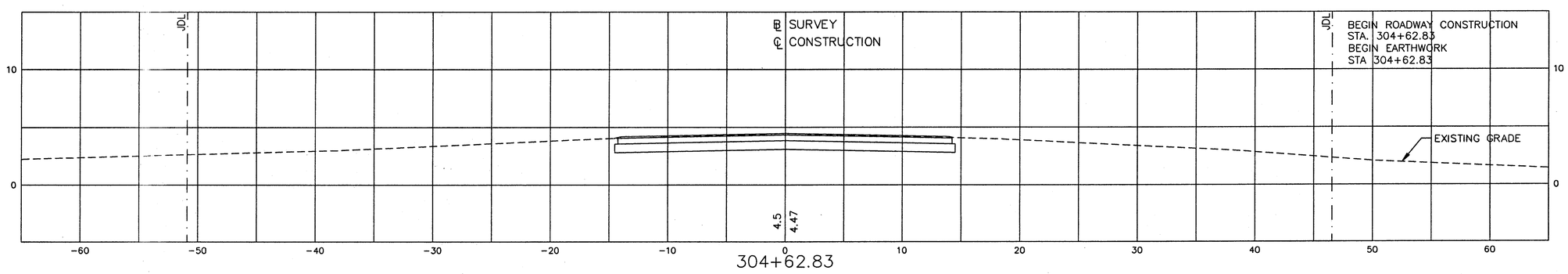

SCALES: HOR. 1"=5'
VER. 1"=5'

REVISIONS	BY	DATE

SURVEY BOOK No.: BK_PG		
SURVEY DIVISION	BY	DATE
SURVEYED		
TECHNICIAN		
CHECKED		
DESIGN DIVISION		
DESIGNED	SMB/GQB	10/01
DRAWN		
CHECKED		

PINELLAS COUNTY, FLORIDA
Public Works

LAND SURVEY DIVISION
22211 U.S. HWY. 19 NORTH
CLEARWATER, FLORIDA 34625-2347
PHONE (727) 464-8904

ENGINEERING DEPARTMENT
440 COURT STREET
CLEARWATER, FLORIDA 34616
PHONE (727) 464-3251

02/24/03
TONY HORRNIK, FLORIDA REGISTERED PROFESSIONAL ENGINEER No. 41941 DATE

FORT DESOTO
WATER CIRCULATION IMPROVEMENTS

CROSS SECTIONS
MAINTENANCE ROAD

DATE: DECEMBER, 2002
PROJECT ID NO: 921573
SURVEY FILE NO.: 228
SHEET C-19 OF 26
FILE:
VIEW:

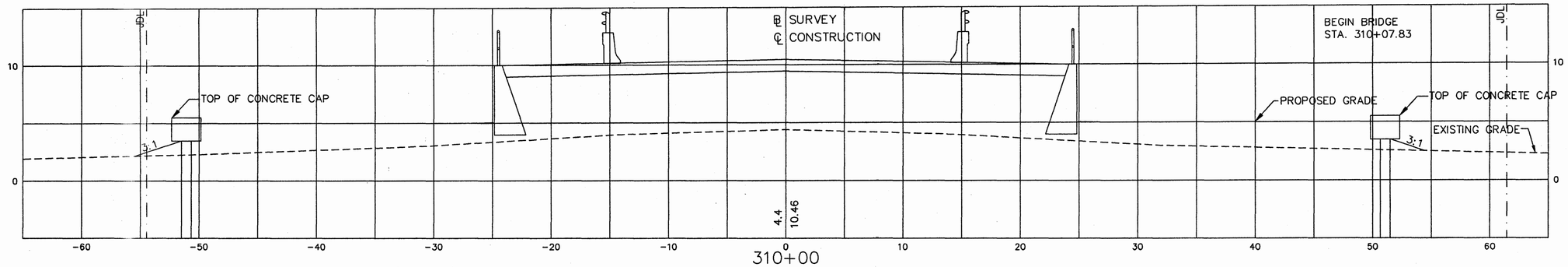

310+00

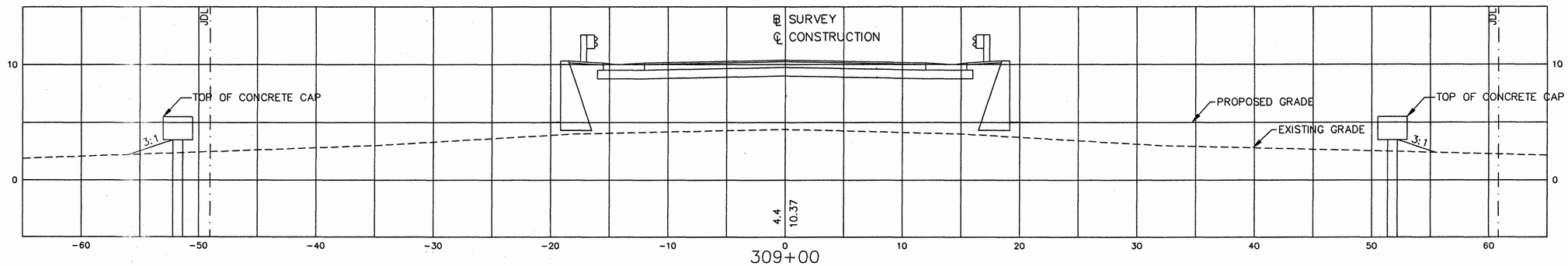

309+00

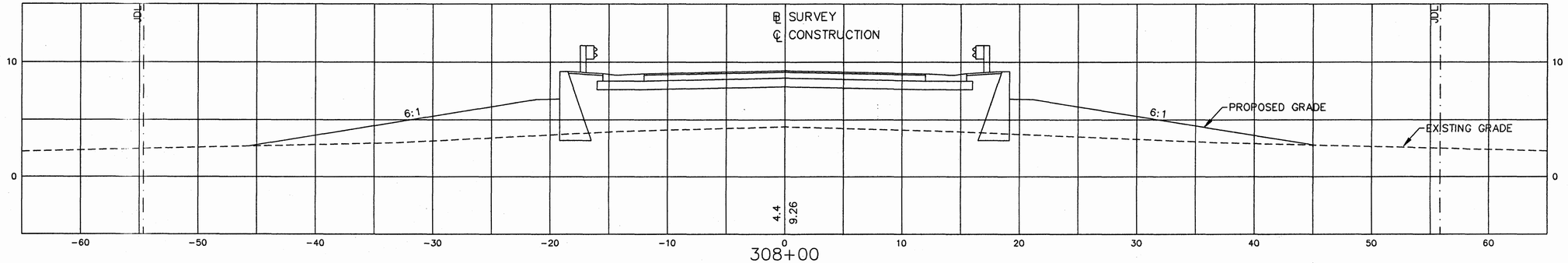

308+00

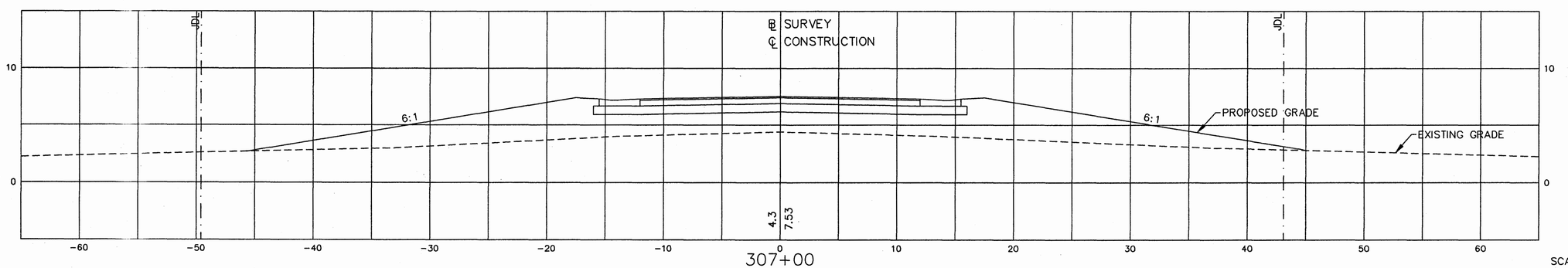

307+00

SCALES: HOR. 1"=5'
VER. 1"=5'

REVISIONS	BY	DATE

SURVEY BOOK No.: BK_PG		
SURVEY DIVISION	BY	DATE
SURVEYED		
TECHNICIAN		
CHECKED		
DESIGN DIVISION		
DESIGNED	SMB/GQB	10/01
DRAWN	SMB/GQB	10/01
CHECKED		

PINELLAS COUNTY, FLORIDA
Public Works

LAND SURVEY DIVISION
22211 U.S. HWY. 19 NORTH
CLEARWATER, FLORIDA 34625-2347
PHONE (727) 464-8904

ENGINEERING DEPARTMENT
440 COURT STREET
CLEARWATER, FLORIDA 34616
PHONE (727) 464-3251

TONY HORRNIK, FLORIDA REGISTERED PROFESSIONAL ENGINEER No. 41941 — DATE 02/26/03

FORT DESOTO
WATER CIRCULATION IMPROVEMENTS

CROSS SECTIONS
MAINTENANCE ROAD

DATE: DECEMBER, 2002
PROJECT ID NO: 921573
SURVEY FILE NO.: 228
SHEET C-20 OF 26
FILE:
VIEW:

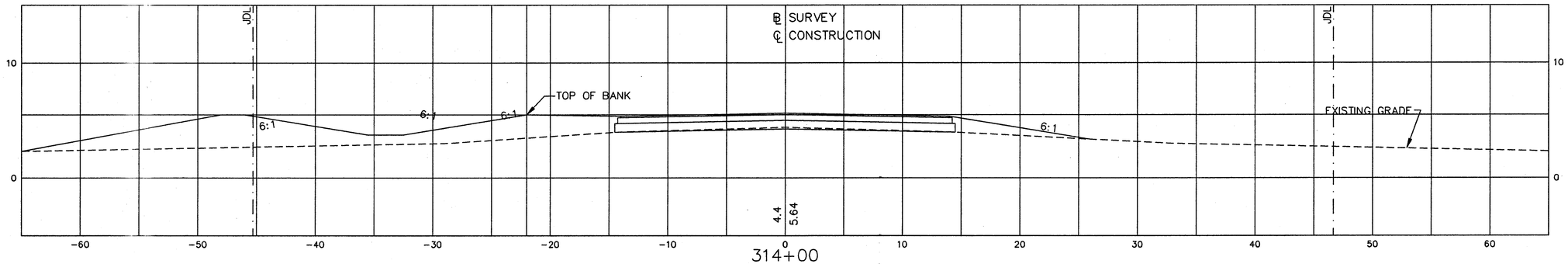

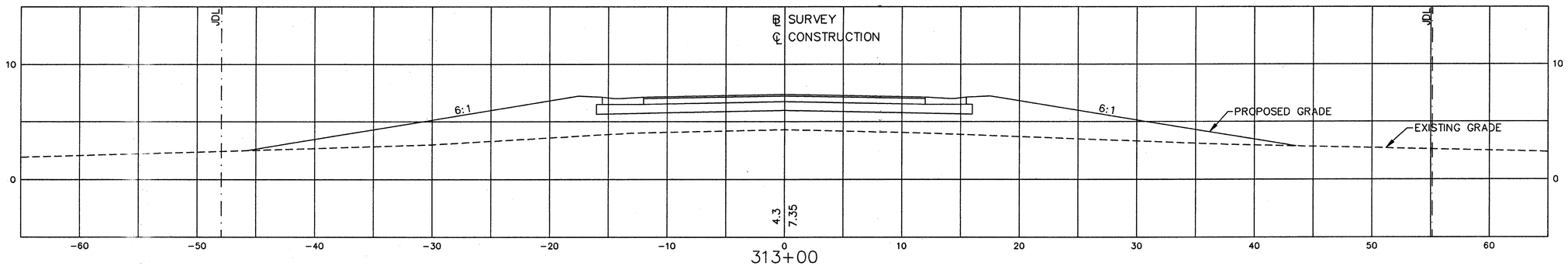

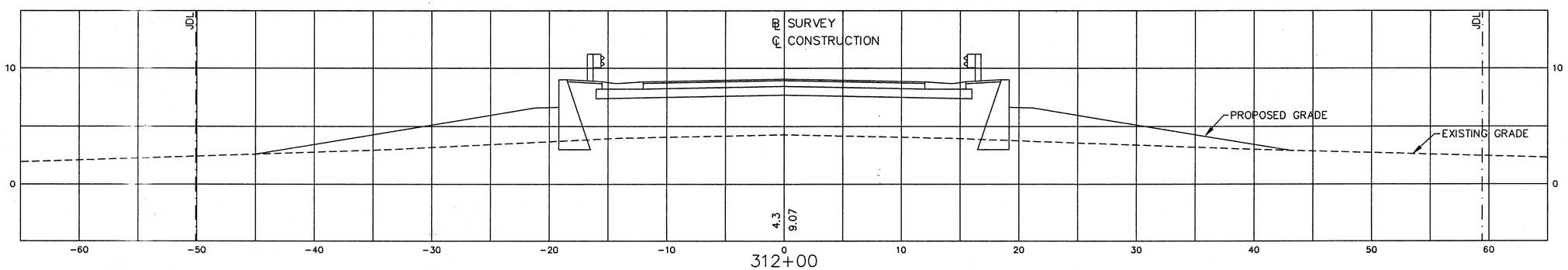

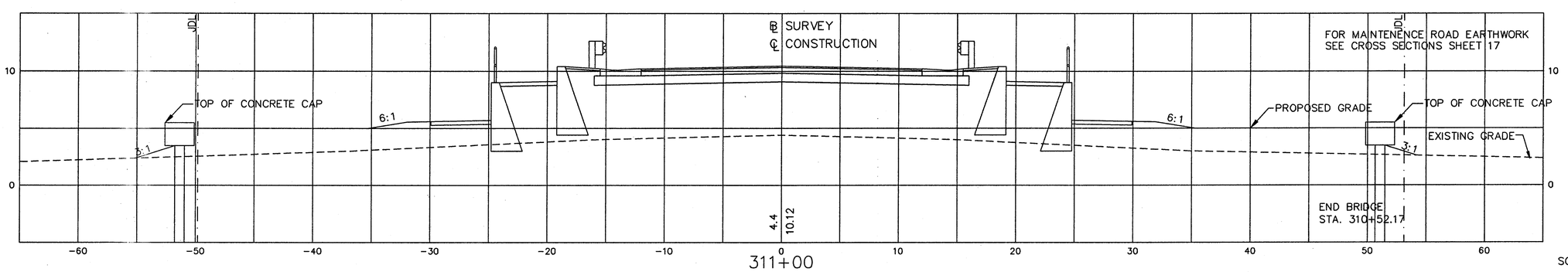

SCALES: HOR. 1"=5'
VER. 1"=5'

REVISIONS	BY	DATE

SURVEY BOOK No.: BK_PG		
SURVEY DIVISION	BY	DATE
SURVEYED		
TECHNICIAN		
CHECKED		
DESIGN DIVISION		
DESIGNED	SMB/GQB	10/01
DRAWN	SMB/GQB	10/01
CHECKED		

PINELLAS COUNTY, FLORIDA
Public Works

LAND SURVEY DIVISION
22211 U.S. HWY. 19 NORTH
CLEARWATER, FLORIDA 34625-2347
PHONE (727) 464-8904

ENGINEERING DEPARTMENT
440 COURT STREET
CLEARWATER, FLORIDA 34616
PHONE (727) 464-3251

TONY HORRNIK, FLORIDA REGISTERED PROFESSIONAL ENGINEER No. 41941 — DATE 02/22/03

FORT DESOTO
WATER CIRCULATION IMPROVEMENTS

CROSS SECTIONS
MAINTENANCE ROAD

DATE: DECEMBER, 2002
PROJECT ID NO: 921573
SURVEY FILE NO.: 228
SHEET C-21 OF 26
FILE:
VIEW:

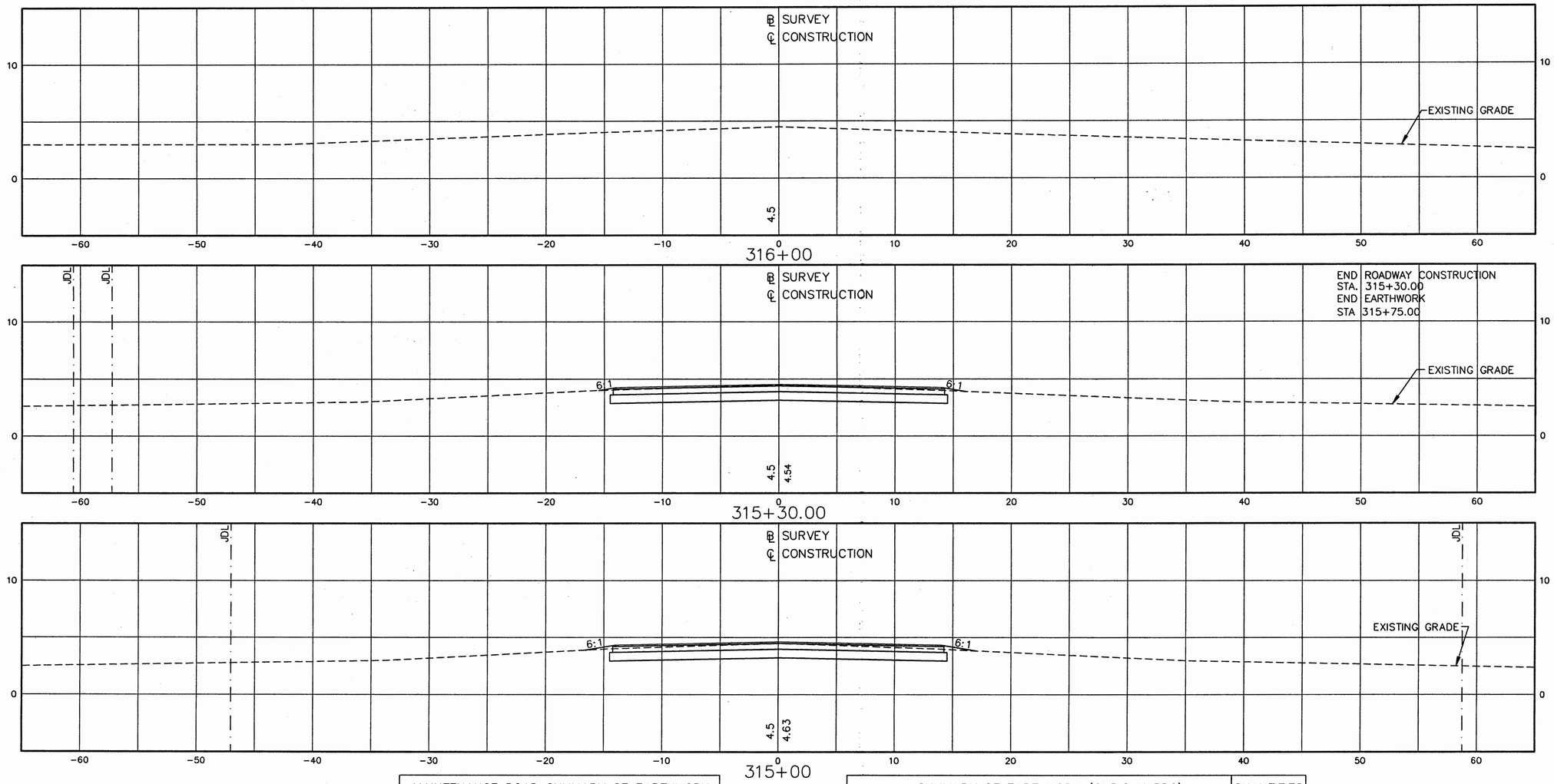

MAINTENANCE ROAD SUMMARY OF EARTHWORK				
	CUT	CUT	FILL	FILL
STA.	AREA(SF)	VOLUME(CY)	AREA(SF)	VOLUME(CY)
304+62.83	40.63		0.00	
		55.94		0.69
305+00.00	40.63		1.00	
		75.26		169.12
306+00.00	0.00		90.31	
		25.67		227.15
306+50.00	27.72		155.00	
		25.67		301.00
307+00.00	0.00		170.00	
		9.26		800.49
308+00.00	5.00		216.13	
		9.26		944.70
309+00.00	0.00		294.00	
		0.00		1172.23
310+00.00	0.00		339.00	
		9.26		1222.23
311+00.00	5.00		321.00	
		18.52		974.63
312+00.00	5.00		205.30	
		9.26		682.04
313+00.00	0.00		163.00	
		0.00		465.40
314+00.00	0.00		88.31	
		75.25		165.39
315+00.00	40.63		1.00	
		45.15		1.12
315+30.00	40.63		1.00	
SUBTOTAL =		358.50	SUBTOTAL =	7126.19

SUMMARY OF EARTHWORK (CUBIC YARDS)	QUANTITIES
ENTRANCE ROAD EXCAVATION	998.47
MAINTENANCE ROAD EXCAVATION	358.50
ENTRANCE ROAD DUE TO CHANNEL EXCAVATION	3500.00
MAINTENANCE ROAD DUE TO CHANNEL EXCAVATION	2500.00
ENTRANCE ROAD EXCAVATION DUE TO RIPRAP	690.00
MAINTENANCE ROAD EXCAVATION DUE TO RIPRAP	580.00
TOTAL EXCAVATION (CUT)	8626.97 CY
ENTRANCE ROAD EMBANKMENT	7990.21
MAINTENANCE ROAD EMBANKMENT	7126.19
TOTAL EMBANKMENT(FILL)	15126.40 CY

NOTE:

THE ESTIMATED VOLUMES PROVIDED DOES NOT INCLUDE PERCENT SWELL / PERCENT SHRINKAGE OF MATERIALS.

SCALES: HOR. 1"=5' VER. 1"=5'

REVISIONS	BY	DATE

SURVEY BOOK No.: BK_PG

SURVEY DIVISION	BY	DATE
SURVEYED		
TECHNICIAN		
CHECKED		
DESIGN DIVISION		
DESIGNED	SMB/GQB	10/01
DRAWN	SMB/GQB	10/01
CHECKED		

PINELLAS COUNTY, FLORIDA
Public Works

LAND SURVEY DIVISION
22211 U.S. HWY. 19 NORTH
CLEARWATER, FLORIDA 34625-2347
PHONE (727) 464-8904

ENGINEERING DEPARTMENT
440 COURT STREET
CLEARWATER, FLORIDA 34616
PHONE (727) 464-3251

TONY HORRNIK FLORIDA REGISTERED PROFESSIONAL ENGINEER No. 41941 — DATE 03/03/03

FORT DESOTO WATER CIRCULATION IMPROVEMENTS

CROSS SECTIONS MAINTENANCE ROAD

DATE: DECEMBER, 2002

PROJECT ID NO: 921573

SURVEY FILE NO.: 228

SHEET C-22 OF 26

FILE:
VIEW:

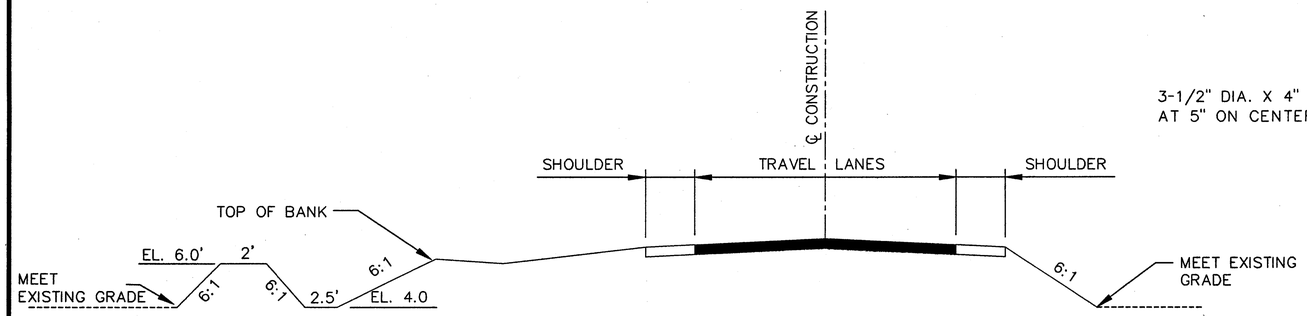

TYPICAL POND SECTION (POND 1 & 2)

N.T.S.

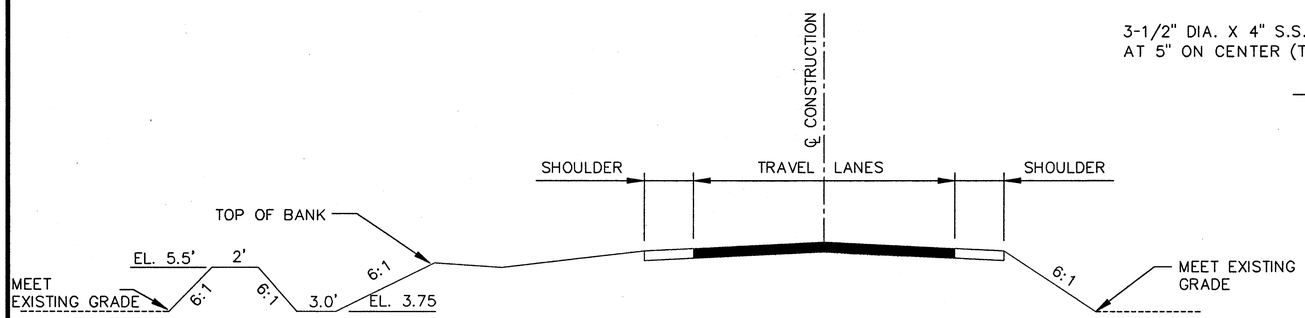

TYPICAL POND SECTION (POND 3 & 4)

N.T.S.

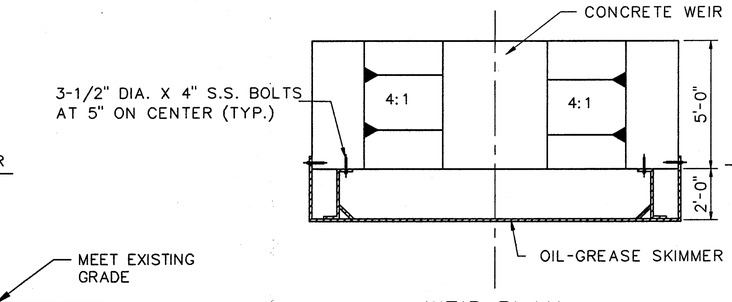

WEIR PLAN

N.T.S.

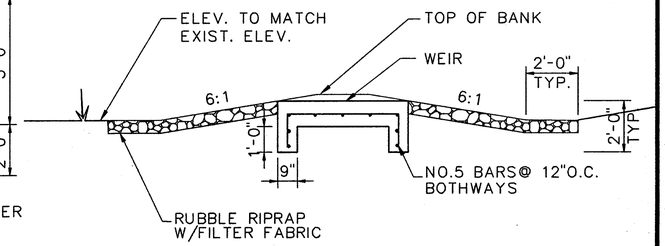

WEIR SIDE ELEVATION

N.T.S.

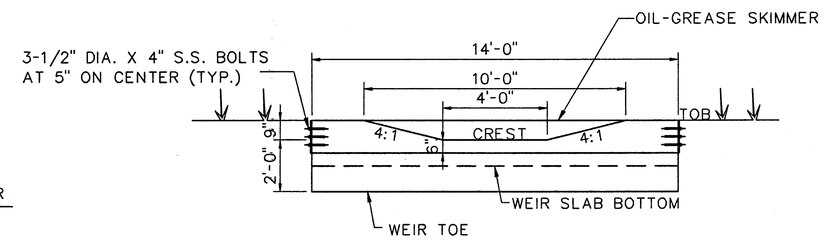

WEIR FRONT ELEVATION

N.T.S.

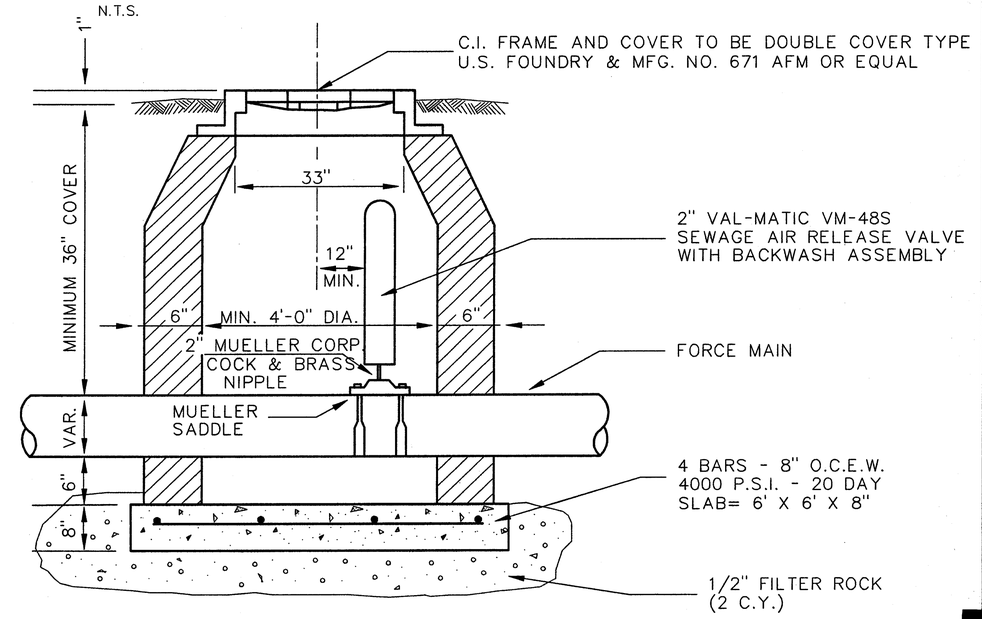

NOTE: PRECAST MANHOLES SHALL BE USED AND SHALL BE CONSTRUCTED TO STANDARD MANHOLE SPECIFICATIONS.

AIR RELEASE VALVE MANHOLE

SCALE: NONE

(S-1)
CONST. GUTTER INLET TYPE S
STA. 514+25 (19.40' RT)
FDOT INDEX 220
INVERT SW 4.37' (15" RCP)
GRATE EL. 6.78'

(S-2)
CONST. GUTTER INLET TYPE S
STA. 514+25 (19.40' LT)
FDOT INDEX 220
INVERT NE 4.05' (15" RCP)
INVERT SW 4.05' (15" RCP)
GRATE EL. 6.78'

(S-3)
CONST. DBI TYPE D
STA. 514+25 (40.20' LT)
FDOT INDEX 232
INVERT NE 3.75" (15" RCP)
INVERT SE 3.75' (15" OPENING)
GRATE EL. 6.0'

(S-4)
OUTFALL STRUCTURE
WEIR W/OIL-GREASE SKIMMER
STA. 513+33 (47.45' RT)
WEIR EL. 5.25'
WEIR WIDTH 4.00'

(S-5)
CONST. GUTTER INLET TYPE S
STA. 520+50 (21.53' RT)
FDOT INDEX 220
INVERT SW 4.03' (15" RCP)
GRATE EL. 6.44'

(S-6)
CONST. GUTTER INLET TYPE S
STA. 520+50 (20.00' LT)
FDOT INDEX 220
INVERT NE 3.85' (15" RCP)
INVERT NW 3.85' (15" RCP)
GRATE EL. 6.36'

(S-7)
CONST. DBI TYPE D
STA. 520+50 (38.47' LT)
FDOT INDEX 232
INVERT NE 3.75' (15" RCP)
INVERT SE 3.75' (15" OPENING)
GRATE EL. 6.0'

(S-8)
OUTFALL STRUCTURE
WEIR W/OIL-GREASE SKIMMER
STA. 521+50 (45.20' LT)
WEIR EL. 5.25'
WEIR WIDTH 4.00'

(S-9)
CONST. GUTTER INLET TYPE S
STA. 306+50 (14.13' RT)
FDOT INDEX 220
INVERT SW 3.75' (15" RCP)
GRATE EL. 6.16

(S-10)
CONST. GUTTER INLET TYPE S
STA. 306+50 (14.13' LT)
FDOT INDEX 220
INVERT NE 3.59' (15" RCP)
INVERT SW 3.59' (15" RCP)
GRATE EL. 6.16'

(S-11)
CONST. DBI TYPE D
STA. 306+50 (33.01' LT)
FDOT INDEX 232
INVERT NE 3.50' (15" RCP)
INVERT SE 3.50' (15" OPENING)
GRATE EL. 5.50'

(S-12)
OUTFALL STRUCTURE
WEIR W/OIL-GREASE SKIMMER
STA. 305+25 (39.00' LT)
WEIR EL. 4.75'
WEIR WIDTH 4.0'

(S-13)
CONST. GUTTER INLET TYPE S
STA. 313+50 (14.13' RT)
FDOT INDEX 220
INVERT SW 3.69' (15" RCP)
GRATE EL. 6.10'

(S-14)
CONST. GUTTER INLET TYPE S
STA. 313+50 (14.13' LT)
FDOT INDEX 220
INVERT NE 3.59' (15" RCP)
INVERT SW 3.59' (15" RCP)
GRATE EL. 6.00'

(S-15)
CONST. DBI TYPE D
STA. 313+50 (28.89' LT)
FDOT INDEX 232
INVERT NE 3.50' (15" RCP)
INVERT SE 3.50' (15" OPENING)
GRATE EL. 5.50'

(S-16)
OUTFALL STRUCTURE
WEIR W/OIL-GREASE SKIMMER
STA. 314+75 (39.62' LT)
WEIR EL. 4.75'
WEIR WIDTH 4.0'

REVISIONS	BY	DATE

SURVEY BOOK No.: BK_PG		
SURVEY DIVISION	BY	DATE
SURVEYED		
TECHNICIAN		
CHECKED		
DESIGN DIVISION		
DESIGNED	GQB	10/02
DRAWN	GQB	10/02
CHECKED		

PINELLAS COUNTY, FLORIDA
Public Works

LAND SURVEY DIVISION
22211 U.S. HWY. 19 NORTH
CLEARWATER, FLORIDA 34625-2347
PHONE (727) 464-8904

ENGINEERING DEPARTMENT
440 COURT STREET
CLEARWATER, FLORIDA 34616
PHONE (727) 464-3251

TONY HORRNIK FLORIDA REGISTERED PROFESSIONAL ENGINEER No. 41941 — DATE 02/25/02

FORT DESOTO
WATER CIRCULATION
IMPROVEMENT

DRAINAGE & WATER LINE
DETAILS

DATE: DECEMBER, 2002
PROJECT ID NO: 921573
SURVEY FILE NO.: N/A
SHEET C-23 OF 26
FILE:
VIEW:

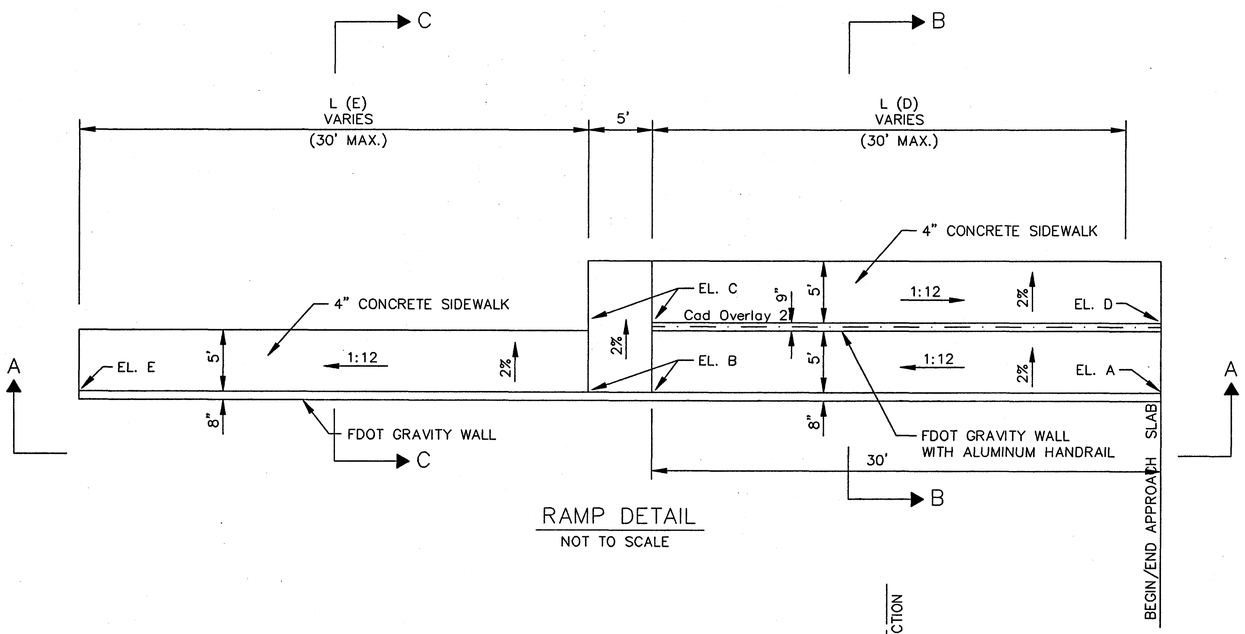

RAMP DETAIL
NOT TO SCALE

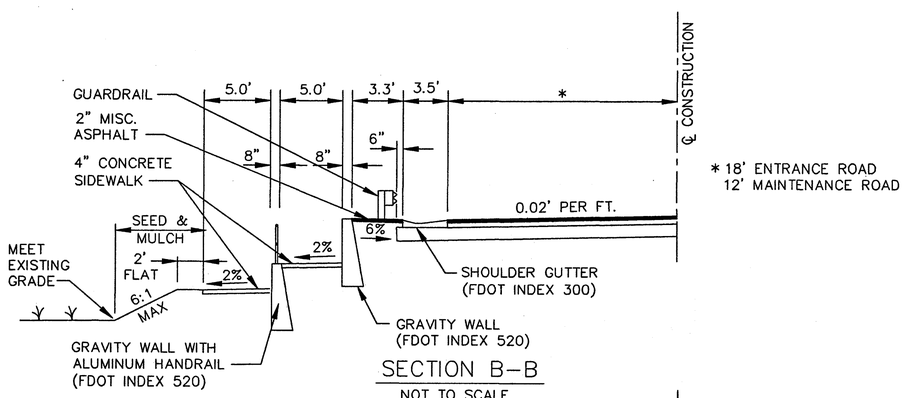

SECTION B–B
NOT TO SCALE

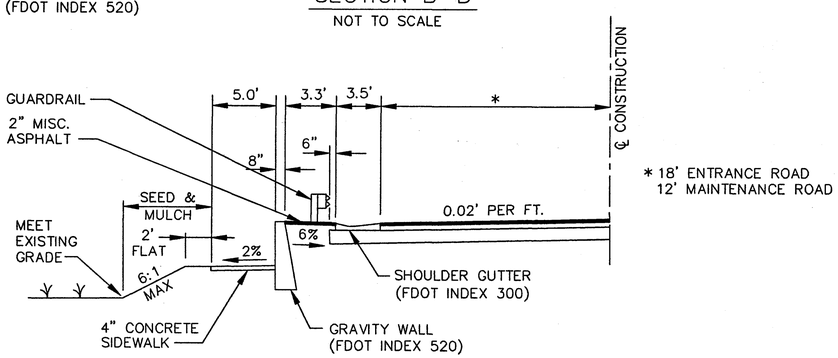

SECTION C–C
NOT TO SCALE

LOCATION	ELEVATION					DISTANCE	
	A	B	C	D	E	D	E
ENTRANCE RD.							
STA BK. LT.	10.00	7.50	7.40	5.00	5.00	30.0'	30.0'
STA. AHD. LT.	9.75	7.25	7.15	4.75	–	30.0'	–
MAINTENANCE RD.							
STA. BK. LT.	10.10	7.60	7.50	5.10	–	30.0'	–
STA. BK. RT.	10.10	7.60	7.50	5.10	–	30.0'	–
STA. AHD. LT.	9.85	7.35	7.25	4.85	–	30.0'	–
STA. AHD. RT.	9.85	7.35	7.25	4.85	–	30.0'	–

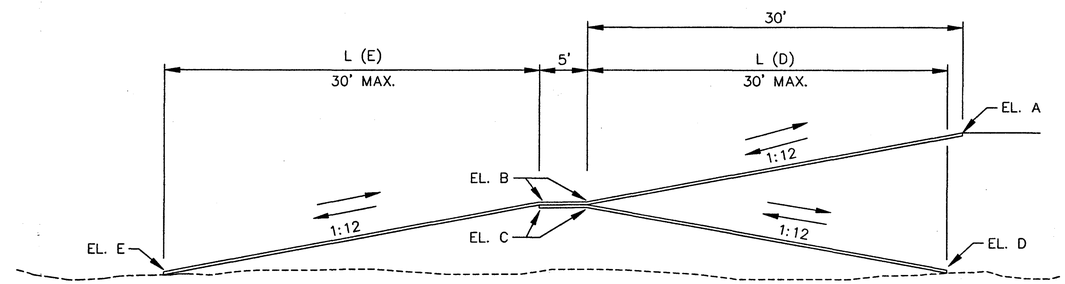

SECTION A–A
NOT TO SCALE

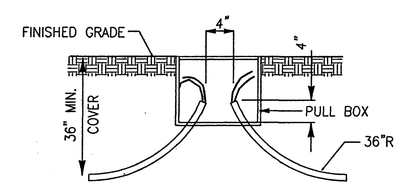

PULL–BOX DETAIL
N.T.S.

1. ALL CONDUIT SHALL BE SCHEDULE 40 POLYVINYL–CHLORIDE (PVC) 2– $\frac{1}{2}$" I.D.

2. MINIMUM COVER OF 36 INCHES SHALL BE MAINTAINED ON ALL CONDUIT RUNS.

3. MINIMUM RADIUS FOR ALL CONDUIT BENDS SHALL BE 36 INCHES.

4. NO MORE THAN 270 DEGREES OF CONDUIT BENDS SHALL BE ALLOWED IN ANY SINGLE RUN.

5. NYLON PULL STRINGS SHALL BE INSTALLED IN ALL CONDUIT RUNS.

6. PULL STRINGS MUST WITHSTAND A PULLING FORCE OF 200 POUNDS.

REVISIONS	BY	DATE

SURVEY BOOK No.: BK_PG		
SURVEY DIVISION	BY	DATE
SURVEYED		
TECHNICIAN		
CHECKED		
DESIGN DIVISION		
DESIGNED	GQB	10/02
DRAWN	GQB	10/02
CHECKED		

PINELLAS COUNTY, FLORIDA
Public Works

LAND SURVEY DIVISION
22211 U.S. HWY. 19 NORTH
CLEARWATER, FLORIDA 34625–2347
PHONE (727) 464–8904

ENGINEERING DEPARTMENT
440 COURT STREET
CLEARWATER, FLORIDA 34616
PHONE (727) 464–3251

03/03/03
TONY HORRNIK, FLORIDA REGISTERED PROFESSIONAL ENGINEER No. 41941 DATE

FORT_DESOTO
WATER_CIRCULATION
IMPROVEMENT

RAMP AND PULL BOX DETAIL

DATE: DECEMBER, 2002
PROJECT ID NO: 921573
SURVEY FILE NO.: 228
SHEET C–24 OF 26
FILE: RAMP_DETAILS
VIEW:

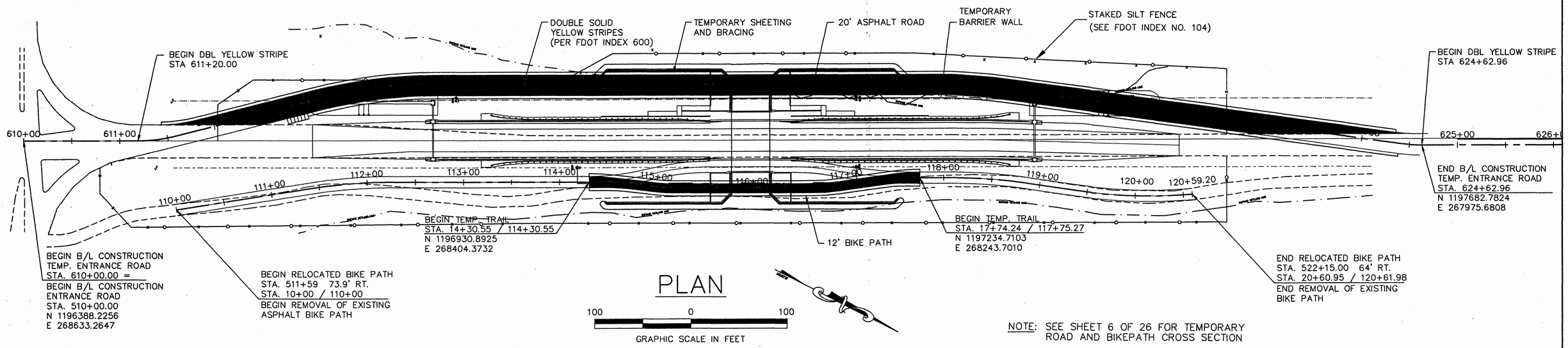

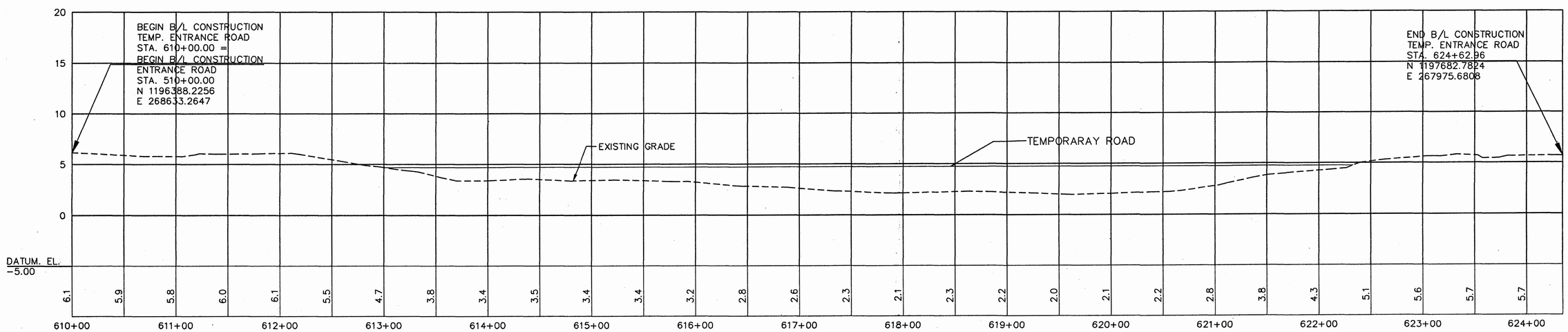

SCALES: HOR. 1" = 100'
VERT. 1" = 10'

REVISIONS	BY	DATE

SURVEY BOOK No.:		
SURVEY DIVISION	BY	DATE
SURVEYED		
TECHNICIAN		
CHECKED		
DESIGN DIVISION		
DESIGNED	SMB/GQB	10/01
DRAWN	SMB/GQB	10/01
CHECKED		

PINELLAS COUNTY, FLORIDA
Public Works

LAND SURVEY DIVISION
22211 U.S. HWY. 19 NORTH
CLEARWATER, FLORIDA 34625-2347
PHONE (727) 464-8904

ENGINEERING DEPARTMENT
440 COURT STREET
CLEARWATER, FLORIDA 34616
PHONE (727) 464-3251

02/25/03
TONY HORRNIK, FLORIDA REGISTERED PROFESSIONAL ENGINEER No. 41941 DATE

FORT DESOTO WATER CIRCULATION IMPROVEMENTS

PLAN & PROFILE TEMPORARY ENTRANCE ROAD

DATE: DECEMBER, 2002
PROJECT ID NO: 921573
SURVEY FILE NO.: N/A
SHEET C-25 OF 26
FILE:
VIEW:

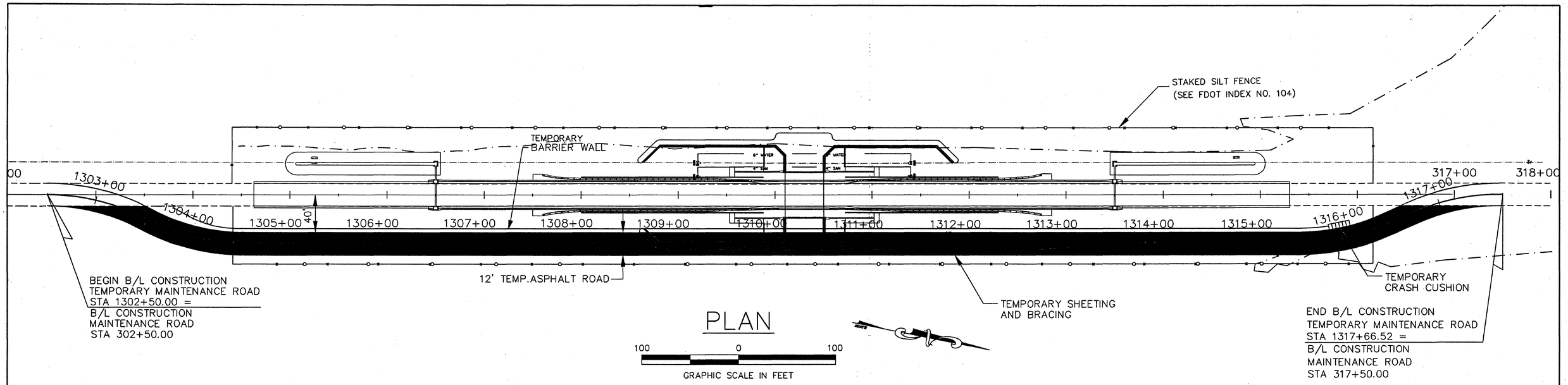

PLAN

NOTE: SEE SHEET 6 OF 26 FOR TEMPORARY ROAD CROSS SECTION

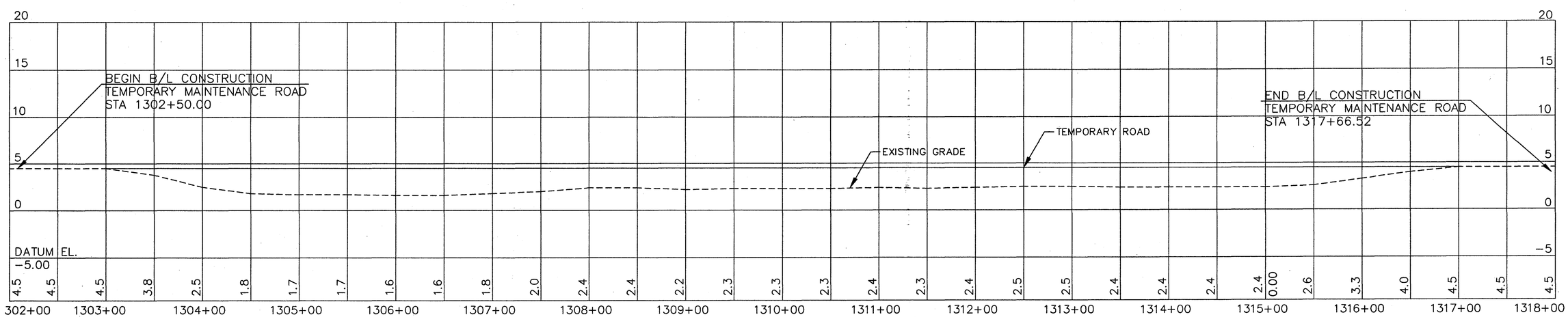

SCALES: HOR. 1" = 100'
VERT. 1" = 10'

REVISIONS	BY	DATE

SURVEY BOOK No.:		
SURVEY DIVISION	BY	DATE
SURVEYED		
TECHNICIAN		
CHECKED		
DESIGN DIVISION		
DESIGNED	SMB/GQB	10/01
DRAWN	SMB/GQB	10/01
CHECKED		

PINELLAS COUNTY, FLORIDA
Public Works

LAND SURVEY DIVISION
22211 U.S. HWY. 19 NORTH
CLEARWATER, FLORIDA 34625-2347
PHONE (727) 464-8900

ENGINEERING DEPARTMENT
440 COURT STREET
CLEARWATER, FLORIDA 34616
PHONE (727) 464-3251

TONY HORRNIK, FLORIDA REGISTERED PROFESSIONAL ENGINEER No. 41941 — DATE 02/26/02

FORT DESOTO
WATER CIRCULATION
IMPROVEMENTS

PLAN & PROFILE
TEMPORARY MAINTENANCE ROAD

DATE: DECEMBER, 2002
PROJECT ID NO: 921573
SURVEY FILE NO.: N/A
SHEET C-26 OF 26
FILE:
VIEW:

PINELLAS COUNTY ENGINEERING DEPARTMENT
STATE OF FLORIDA

FORT DESOTO WATER CIRCULATION IMPROVEMENTS

STRUCTURE PLANS
(ENTRANCE ROAD & MAINTENANCE ROAD BRIDGES)

P.I.D. NO. 921573

SERVING YOU EVERY DAY

PINELLAS COUNTY GOVERNMENT IS COMMITTED TO PROGRESSIVE PUBLIC POLICY, SUPERIOR PUBLIC SERVICE, COURTEOUS PUBLIC CONTACT, JUDICIOUS EXERCISE OF AUTHORITY AND SOUND MANAGEMENT OF PUBLIC RESOURCES TO MEET THE NEEDS AND CONCERNS OF OUR CITIZENS TODAY AND TOMORROW.

PROJECT PRODUCTION TEAM (CORE MEMBERS)	
DESIGN:	GUILLERMO BAY (PROJECT MANAGER) (727-464-4369)
PARK ENGINEER:	ED LUCAS
PARK SUPERVISOR:	BOB BROWNING
RIGHT-OF-WAY:	SONNY NAAR
CONSTRUCTION:	ROBERT E. POWELL
SURVEY:	DANNY BURGESS
TRANSPORTATION & PLANNING:	ROBERT DAVIS
HIGHWAY:	DENNIS GRIZZEL
DEPT. OF ENVIR. MGT:	JIM MEYER
PERMIT COORDINATOR:	NANCY CASTRICONE
UTILITY COORDINATOR:	ROBERT JANOWSKI

ATTENTION IS DIRECTED TO THE FACT THAT THESE PLANS MAY HAVE BEEN REDUCED IN SIZE BY REPRODUCTION. THIS MUST BE CONSIDERED WHEN OBTAINING SCALED DATA.

UTILITY WARNING NOTE

ABOVE GROUND AND UNDERGROUND UTILITIES MAY BE IN THE AREA OF THIS PROJECT - PROCEED WITH CAUTION - CALL "SUNSHINE" AND THE UTILITY OWNER(S) 2 WORKING DAYS IN ADVANCE OF BEGINNING WORK (1-800-432-4770).

SUMMARY OF REVISIONS	
DATE	DESCRIPTION

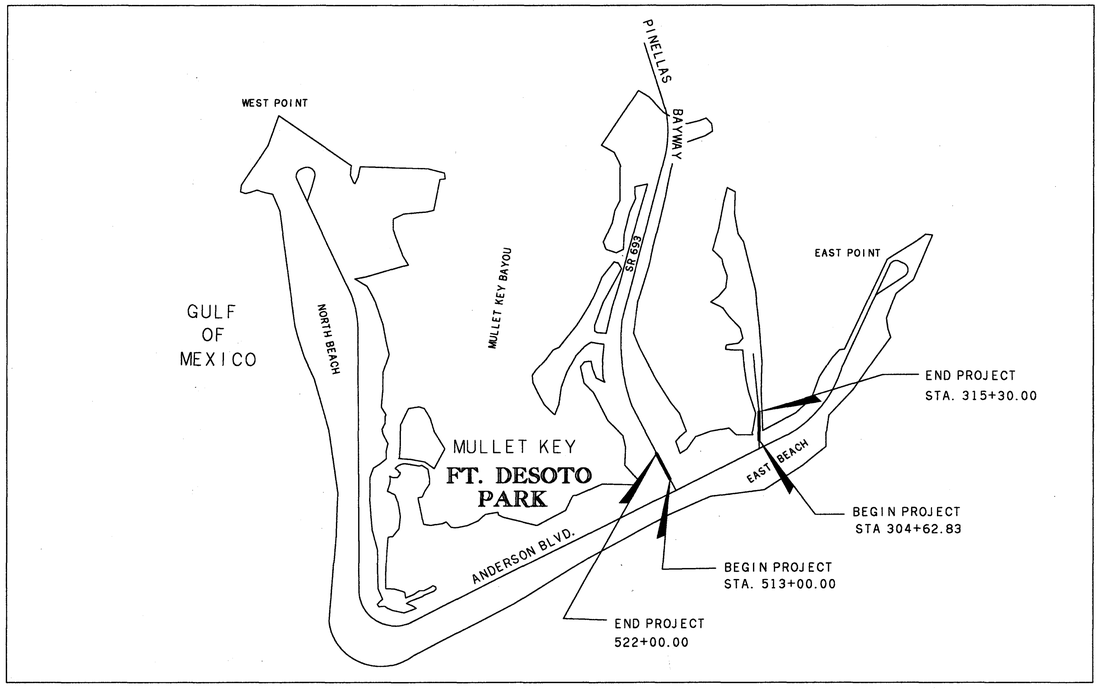

N.T.S.

SECTION No. 8, 9
TOWNSHIP No. 33 S RANGE No. 16 E

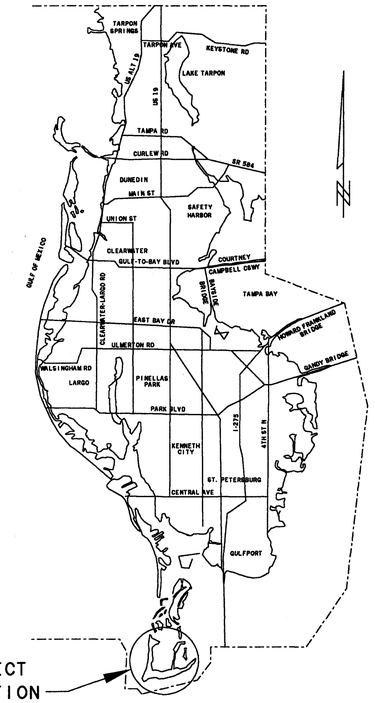

STRUCTURE SHOP DRAWINGS
TO BE SUBMITTED TO:

URS CORPORATION SOUTHERN
ATTN: MURRAY C. McDONOUGH, P.E.
7650 WEST COURTNEY CAMPBELL CAUSEWAY
TAMPA, FLORIDA 33607-1462

STRUCTURE PLANS PREPARED BY:

URS

URS CORPORATION SOUTHERN
7650 WEST COURTNEY CAMPBELL CAUSEWAY
TAMPA, FLORIDA 33607-1462
CERTIFICATE OF AUTHORIZATION NO.00000002
(813) 286-1711

VENDOR NO. F592087895002

CONTRACT. NO. X-XXXX

SUBMITTED BY & RECOMMENDED FOR APPROVAL BY: RUDY GARCIA, DIVISION ENGINEER — DATE 2/26/03

RECOMMENDED FOR APPROVAL BY: ELIZABETH WARREN, DIRECTOR OF PARKS DEPARTMENT — DATE 2/26/03

RECOMMENDED FOR APPROVAL BY: JAN R. HERBST, P.E., DIRECTOR OF ENGINEERING — DATE 2/27/03

APPROVED BY: J. KEITH WICKS, P.E., DIRECTOR OF PUBLIC WORKS — DATE 2/28/03

MURRAY C. McDONOUGH, P.E.
FLORIDA REGISTERED PROFESSIONAL ENGINEER No. 43353
440 COURT STREET
CLEARWATER, FLORIDA 33756
(727) 464-3251

2/25/03
DATE

F:\BRIDGES\FORT DESOTO\WATER CIRCULATION IMPROVEMENTS\ENTRANCE ROAD\BCOVB101.DGN

02/25/03 03:21:05 PM

INDEX OF PLANS

SHEET NO.	SHEET DESCRIPTION
1	INDEX OF PLANS, SUMMARY OF QUANTITIES AND TYPICAL DETAILS
2	GENERAL NOTES
3	GENERAL NOTES & DETAILS FOR PRESTRESSED CONCRETE PILES (FDOT INDEX NO. 600)
4	PRESTRESSED CONCRETE PILE SPLICES (FDOT INDEX NO. 601)
5	18" SQ. PRESTRESSED CONCRETE PILES (FDOT INDEX NO. 618)
6	TRAFFIC RAILING BARRIER - 32" F SHAPE (FDOT INDEX NO.700 - DRAWING 1 OF 2)
7	TRAFFIC RAILING BARRIER - 32" F SHAPE (FDOT INDEX NO.700 - DRAWING 2 OF 2)
8	PEDESTRIAN/BICYCLE RAILING (FDOT INDEX NO. 800)
9	ALUMINUM PEDESTRIAN/BICYCLE BULLET RAILING FOR TRAFFIC RAILING BARRIER (FDOT INDEX NO. 810)
10	ALUMINUM PEDESTRIAN/BICYCLE BULLET RAILING DETAILS (FDOT INDEX NO. 820 - DWG. 1 OF 2)
11	ALUMINUM PEDESTRIAN/BICYCLE BULLET RAILING DETAILS (FDOT INDEX NO. 820 - DWG. 2 OF 2)
12	STANDARD BAR BENDING DETAILS (FDOT INDEX NO. 1300)
13	PLAN AND ELEVATION (ENTRANCE ROAD BRIDGE)
14	PLAN AND ELEVATION (MAINTENANCE ROAD BRIDGE)
15	FOUNDATION LAYOUT (ENTRANCE ROAD BRIDGE)
16	FOUNDATION LAYOUT (MAINTENANCE ROAD BRIDGE)
17	END BENT 1 PLAN AND ELEVATION (ENTRANCE ROAD BRIDGE)
18	END BENT 2 PLAN AND ELEVATION (ENTRANCE ROAD BRIDGE)
19	END BENTS 1 & 2 PLAN AND ELEVATION (MAINTENANCE ROAD BRIDGE)
20	END BENT DETAILS
21	SUPERSTRUCTURE PLAN, TYPICAL SECTION & DECK ELEVATIONS (ENTRANCE ROAD BRIDGE)
22	SUPERSTRUCTURE PLAN, TYPICAL SECTION & DECK ELEVATIONS (MAINTENANCE ROAD BRIDGE)
23	SUPERSTRUCTURE DETAILS
24	PRECAST CONCRETE SLAB NOTES
25	PRESTRESSED CONCRETE SLAB DETAILS(1)
26	PRESTRESSED CONCRETE SLAB DETAILS(2)
27	PRESTRESSED CONCRETE SLAB DETAILS(3)
28	MISCELLANEOUS DETAILS
29	BULKHEAD WALL PLAN AT END BENT 1 (ENTRANCE ROAD BRIDGE)
30	BULKHEAD WALL ELEVATION AT END BENT 1 (ENTRANCE ROAD BRIDGE)
31	BULKHEAD WALL PLAN AT END BENT 2 (ENTRANCE ROAD BRIDGE)
32	BULKHEAD WALL ELEVATION AT END BENT 2 (ENTRANCE ROAD BRIDGE)
33	BULKHEAD WALL PLAN AT END BENTS (MAINTENANCE ROAD BRIDGE)
34	BULKHEAD WALL ELEVATION AT END BENTS (MAINTENANCE ROAD BRIDGE)
35	BULKHEAD WALL DETAILS(1)
36	BULKHEAD WALL DETAILS(2)
37	PRECAST CONCRETE SHEET PILES (FDOT INDEX NO. S-650)
38	PRECAST CONCRETE SHEET PILES TYPE "A" - 10" THICK (FDOT INDEX NO. 660)
39	PRECAST CONCRETE SHEET PILES TYPE "B" VARIABLE ANGLE CORNER PILE (FDOT INDEX NO. 680)
40	REINFORCING BAR LIST
41	APPROACH SLABS

SUMMARY OF STRUCTURE QUANTITIES

PAY ITEM NO.	DESCRIPTION OF ITEM	UNITS	ENTRANCE ROAD BRIDGE	MAINTENANCE ROAD BRIDGE	TOTAL
400-4-4	CLASS IV CONCRETE (SUPERSTRUCTURE)	CY	40.7	31.0	71.7
400-4-5	CLASS IV CONCRETE (SUBSTRUCTURE)	CY	53.3	41.7	87
400-4-7	CLASS IV CONCRETE (BULKHEAD)	CY	61.7	55.1	116.9
400-2308	CLASS II CONCRETE (APPROACH SLAB)	CY	96	72.3	168.3
400-7	BRIDGE FLOOR GROOVING	SY	375	262	637
415-1-4	REINFORCING STEEL (SUPERSTRUCTURE)	LB	2,403	1,819	4,222
415-1-5	REINFORCING STEEL (SUBSTRUCTURE)	LB	4,564	3,479	8,044
415-1-7	REINFORCING STEEL (BULKHEAD)	LB	4,762	4,182	8,944
415-1-8	REINFORCING STEEL (APPROACH SLAB)	LB	17,444	13,137	30,581
450-2-3	PRESTRESSED SLAB UNITS TRANSVERSELY POSTTENSIONED (48"X18")(TYPE III)	LF	43.3	0	43.3
450-2-4	PRESTRESSED SLAB UNITS TRANSVERSELY POSTTENSIONED (72"X18")(TYPE I)	LF	303.3	173.3	476.6
450-2-5	PRESTRESSED SLAB UNITS TRANSVERSELY POSTTENSIONED (72"X18")(TYPEII)	LF	130.0	173.3	303.3
455-13013	CONCRETE SHEET PILING (10"X30") (FURNISHED & INSTALLED)	LF	3,618	2,875	6,493
455-16015	CONCRETE SHEET PILING (45 DEGREE CORNER) (FURNISHED & INSTALLED)	LF	169	169	338
455-34-3	PRESTRESSED CONCRETE PILING (FURNISHED & DRIVEN)(18" SQ.)	LF	1,200	770	1,970
452-1	ANCHOR BARS	EA	16	12	28
455-137	DYNAMIC LOAD TEST	EA	1	1	2
455-14013	TEST PILES (FURNISHED & DRIVEN) (18" SQ.)	LF	95	85	180
460-70-1	ALUMINUM RAILINGS (SINGLE RAIL)	LF	0	105	105
460-70-2	ALUMINUM RAILINGS (DOUBLE RAIL)	LF	273	0	273
521-5-1	CONCRETE TRAFFIC RAILING BARRIER (BRIDGE)(32" F-SHAPE)	LF	169	169	338
521-6-1	CONCRETE PARAPET (PEDESTRIAN/BICYCLE)	LF	89	89	178

(1) "CLASS 5 APPLIED FINISH COATING". COLOR OF FINISH COATING SHALL BE FEDERAL STANDARD 23448. SEE NOTES 2 & 4.

(2) "CLASS 1 SURFACE FINISH".

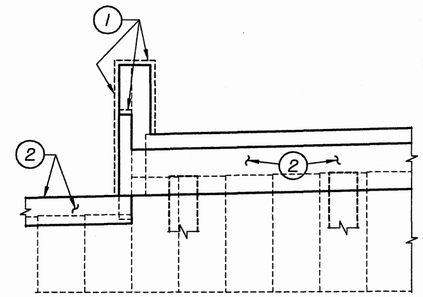

END BENTS & BULKHEAD

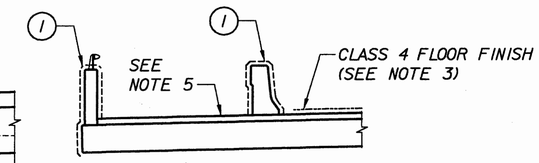

SUPERSTRUCTURE

TYPICAL SURFACE FINISH DETAILS

SURFACE FINISH NOTES

1. FINISH IN ACCORDANCE WITH ARTICLE 400-15.2 OF THE SPECIFICATIONS UNLESS NOTED OTHERWISE.
2. ALL EXPOSED CONCRETE SURFACES OF END BENTS (EXCEPT TOP AND FRONT OF CAPS), SUPERSTRUCTURE COPING, TRAFFIC RAILING BARRIERS AND CONCRETE PARAPET SHALL RECEIVE A "CLASS 5 APPLIED FINISH COATING" IN ACCORDANCE WITH THE SPECIFICATIONS. COLOR OF FINISH COATING SHALL BE AS NOTED. SEE SURFACE FINISH DETAILS.
3. APPLY A CLASS 4 FLOOR FINISH ON BRIDGE DECK AND CONCRETE APPROACH SLABS IN ACCORDANCE WITH FDOT SPECIFICATION 400-15.2.5. AFTER MEETING THE CURING AND SMOOTHNESS REQUIREMENTS, GROOVE THE TRAVEL LANE AND SHOULDER AREAS OF BRIDGE DECK AND APPROACH SLABS.
4. EXPOSED SURFACES OF BULKHEAD COPING AND FRONT OF END BENT CAPS SHALL RECEIVE A "CLASS 1 SURFACE FINISH".
5. THE C.I.P. TOPPING WITHIN THE SIDEWALK AREAS SHALL BE FINISHED IN ACCORDANCE WITH SECTION 522-7 OF THE SPECIFICATIONS.

REVISIONS	BY	DATE

SURVEY BOOK No.:		
SURVEY DIVISION	BY	DATE
SURVEYED	---	---
TECHNICIAN	---	---
CHECKED	---	---
DESIGN DIVISION		
DESIGNED	MCM	6/00
DRAWN	DCW	8/00
CHECKED	MCM	8/00

PINELLAS COUNTY, FLORIDA
Public Works

URS CORPORATION SOUTHERN
7650 WEST COURTNEY
CAMPBELL CAUSEWAY
TAMPA, FLORIDA 33607-1462
NO. 00000002

MURRAY C. McDONOUGH FLORIDA REGISTERED PROFESSIONAL ENGINEER No. 43353 — DATE 2/25/03

FORT DESOTO
WATER CIRCULATION IMPROVEMENTS

INDEX OF PLANS, SUMMARY OF QUANTITIES AND TYPICAL DETAILS

DATE: FEBRUARY, 2003
PROJECT ID NO.: 921573
SURVEY FILE NO.: N/A
SHEET 1 OF 41
FILE:...\BNDXB101.DGN
VIEW: PLOT

E:\Bridges\Fort Desoto\Water Circulation Improvements\Entrance Road\bndxb101.dgn

CONSTRUCTION SPECIFICATIONS:

1. FLORIDA DEPARTMENT OF TRANSPORTATION STANDARD SPECIFICATIONS FOR ROAD AND BRIDGE CONSTRUCTION (2000 EDITION), AND SUPPLEMENTS THERETO.
2. PROJECT SPECIAL PROVISIONS.

DESIGN SPECIFICATIONS:

1. DESIGNED IN ACCORDANCE WITH THE 1996 EDITION OF THE AASHTO STANDARD SPECIFICATIONS FOR HIGHWAY BRIDGES WITH INTERIM SPECIFICATIONS THRU 1998.
2. DESIGN IS ALSO IN ACCORDANCE WITH THE FDOT "STRUCTURES DESIGN GUIDELINES" (1998 EDITION) WITH REVISIONS THRU JANUARY 1, 1999.
3. DETAILED IN ACCORDANCE WITH FDOT "STRUCTURES DETAILING MANUAL" (1999 EDITION).

DIMENSIONS AND ELEVATIONS:

1. ALL DIMENSIONS ARE MEASURED HORIZONTALLY AND VERTICALLY UNLESS NOTED OTHERWISE.
2. ALL ELEVATIONS ARE ACCORDING TO 1928 NGVD.

DESIGN METHOD:

1. ALL MAJOR BRIDGE COMPONENTS ARE DESIGNED FOR LOAD FACTOR DESIGN, EXCEPT FOR PRESTRESSED CONCRETE SLABS AND BEARINGS, WHICH ARE DESIGNED BY SERVICE LOAD DESIGN. PRESTRESSED CONCRETE SLABS ARE ALSO CHECKED FOR ULTIMATE CAPACITY.
2. BULKHEAD WALLS ARE DESIGNED BY SERVICE LOAD DESIGN.

DESIGN LOADINGS:

1. VEHICULAR LOADING: HS25-44.
2. PEDESTRIAN LOADING: 85 LBS PER SQUARE FOOT
3. DISTRIBUTION VALUES PER SIX-FOOT-WIDE PRESTRESSED SLAB:

	ENTRANCE ROAD BRIDGE	MAINTENANCE ROAD BRIDGE
VEHICULAR LOADS (WHEEL)	0.92	0.92
TRAFFIC RAILING BARRIER (PLF)	77	102
PEDESTRIAN / BICYCLE RAILING (PLF)	39	52

NOTE: TRAFFIC RAILING BARRIER AND PEDESTRIAN / BICYCLE RAILING LOADS ARE DISTRIBUTED UNIFORMLY ACROSS BRIDGE WIDTH.

4. FUTURE WEARING SURFACE - DESIGNED FOR 15 POUNDS PER SQUARE FOOT
5. THERMAL LOADS FOR LONGITUDINAL DESIGN:
   - NORMAL MEAN TEMPERATURE 70° F
   - THERMAL COEFFICIENT 0.0000060 /°F
   - TEMPERATURE RANGE FOR DESIGN OF STRUCTURE
     - RISE 30°F
     - FALL 40°F
6. EARTHQUAKE: DESIGNED FOR MINIMUM BEARING SUPPORT LENGTH
7. VESSEL IMPACT CRITERIA: BRIDGE NOT DESIGNED FOR SHIP IMPACT.
8. BULKHEAD WALLS ARE DESIGNED FOR AN EQUIVALENT LIVE LOAD SURCHARGE EQUAL TO TWO FEET OF EARTH.

ENVIRONMENT:

1. SUPERSTRUCTURE: EXTREMELY AGGRESSIVE (ENTRANCE ROAD BRIDGE)
   EXTREMELY AGGRESSIVE (MAINTENANCE ROAD BRIDGE)
2. SUBSTRUCTURE: EXTREMELY AGGRESSIVE (ENTRANCE ROAD BRIDGE)
   EXTREMELY AGGRESSIVE (MAINTENANCE ROAD BRIDGE)
3. BULKHEAD WALLS: EXTREMELY AGGRESSIVE (ENTRANCE ROAD BRIDGE)
   EXTREMELY AGGRESSIVE (MAINTENANCE ROAD BRIDGE)

CONCRETE:

1. CONCRETE:

CLASS OF CONCRETE	MINIMUM 28-DAY COMPRESSIVE STRENGTH (PSI)	LOCATION OF CONCRETE
II (BRIDGE DECK)	F'c = 4,500	APPROACH SLABS
IV	F'c = 5,500	C.I.P. DECK TOPPING
IV WITH CALCIUM NITRITE	F'c = 5,500	C.I.P. TRAFFIC RAILING BARRIER AND PEDESTRIAN/BICYCLE RAILING
IV	F'c = 5,500	C.I.P. SUBSTRUCTURE AND BULKHEAD CAP
V(SPECIAL) WITH MICROSILICA	F'c = 6,000	PRESTRESSED PILES AND PRECAST SHEET PILES
IV WITH CALCIUM NITRITE	F'c = 5,500	PRESTRESSED CONCRETE SLABS

2. CONCRETE SHALL CONFORM TO ARTICLE 346 OF THE SPECIFICATIONS.
3. PROVIDE 3/4" CHAMFERS ON ALL EXPOSED EDGES, UNLESS NOTED OTHERWISE.
4. CONSTRUCTION JOINTS WILL BE PERMITTED ONLY AT LOCATIONS INDICATED ON PLANS. ADDITIONAL CONSTRUCTION JOINTS OR ALTERATIONS TO THOSE SHOWN SHALL REQUIRE WRITTEN APPROVAL OF THE ENGINEER.

CONCRETE SURFACE FINISH

1. A CLASS 5 FINISH COATING SHALL BE APPLIED TO EXPOSED CONCRETE SURFACES AS SHOWN IN THE SURFACE FINISH DETAIL, SHEET 1.
2. THE C.I.P. TOPPING WITHIN THE SIDEWALKS AREAS SHALL BE FINISHED IN ACCORDANCE WITH SECTION 522-7 OF THE SPECIFICATIONS.

REINFORCING STEEL:

1. ALL REINFORCING STEEL SHALL BE ASTM A615, GRADE 60.
2. ALL DIMENSIONS PERTAINING TO LOCATION OF REINFORCING STEEL ARE TO CENTERLINE OF BARS EXCEPT WHERE CLEAR DIMENSION IS NOTED TO FACE OF CONCRETE.
3. REINFORCING STEEL DETAIL DIMENSIONS ARE OUT-TO-OUT OF BARS.
4. COVER ON REINFORCING STEEL AS FOLLOWS, UNLESS NOTED OTHERWISE:

PRESTRESS CONCRETE SLABS	2"	EXCEPT TOP SURFACE
PRESTRESS CONCRETE SLABS	2"	TOP SURFACE
SUPERSTRUCTURE C.I.P.	2.5"	TOP OF DECK TOPPING
	2"	ALL OTHER LOCATIONS
C.I.P. SUBSTRUCTURE AND BULKHEAD CAP	4"	EXTERNAL SURFACES FORMED
C.I.P. SUBSTRUCTURE AND BULKHEAD CAP	4.5"	EXTERNAL SURFACES AGAINST EARTH

CONCRETE COVER SHOWN IN THE PLANS DO NOT INCLUDE REINFORCEMENT PLACEMENT AND FABRICATION TOLERANCES UNLESS SHOWN AS "MINIMUM COVER". SEE FDOT SPECIFICATIONS FOR ALLOWABLE REINFORCEMENT PLACEMENT TOLERANCES.

PILE FOUNDATIONS:

1. FOR PILING NOTES AND CRITERIA, SEE THE FOUNDATION LAYOUT DRAWING.

SUPERSTRUCTURE:

1. THE RIDING SURFACE OF THE BRIDGE DECK SHALL BE SCREEDED TO THE FINISH GRADE ELEVATIONS WITH NO ALLOWANCES FOR PERMANENT CAMBER.
2. FOR PRESTRESS CONCRETE SLAB GENERAL NOTES, SEE SHEET 24.

BEARINGS:

1. PLAIN NEOPRENE BEARING PADS SHALL BE FURNISHED BY THE CONTRACTOR.

UTILITIES:

1. UTILITIES SHOWN IN THE BRIDGE PLANS ARE IN THEIR APPROXIMATE LOCATIONS. FOR ADDITIONAL INFORMATION, REFER TO THE UTILITY PLANS.
2. CONTRACTOR SHALL FIELD VERIFY UTILITY LOCATIONS BEFORE COMMENCING WITH CONSTRUCTION.

CONSTRUCTION NOTES:

1. EXCAVATION IN FRONT OF AND BACKFILL PLACEMENT BEHIND ENDBENTS SHALL NOT BE PERFORMED UNTIL PRECAST CONCRETE SLABS HAVE BEEN PLACED AND END FIXITY ACHIEVED.
2. SEE ROADWAY PLANS FOR MAINTENANCE OF TRAFFIC AND CONSTRUCTION PHASING REQUIREMENTS.
3. JETTING OF 18" SQUARE PILES WILL NOT BE PERMITTED.

BULKHEAD WALL DESIGN CRITERIA:

1. BULKHEAD WALLS ARE DESIGNED TO WITHSTAND PRESSURES GIVEN BY RANKINE THEORY.
2. SOIL PARAMETERS:

SATURATED UNIT WEIGHT (PCF)	100
EFFECTIVE UNIT WEIGHT (PCF)	38
COHESION (PCF)	0
ANGLE OF SOIL FRICTION (DEGREES)	29
ACTIVE EARTH PRESSURE COEFFICIENT	0.35
PASSIVE EARTH PRESSURE COEFFICIENT	2.9

3. WATER TABLE IS ASSUMED TO BE ELEVATION 1.75'
4. FOR PRECAST CONCRETE SHEET PILE NOTES, SEE SHEET 37.

BID ITEM NOTES:

1. FOR SUMMARY OF BRIDGE PAY ITEMS SEE SHEET 1.
2. PAYMENT FOR INCIDENTAL ITEMS NOT SPECIFICALLY COVERED IN THE INDIVIDUAL BID ITEMS SHALL BE INCLUDED IN THE CONTRACT UNIT PRICE FOR THE BID ITEMS.
3. FOR MAINTENANCE OF TRAFFIC BID ITEM NOTES, SEE ROADWAY PLANS.
4. THOSE PORTIONS OF THE PROPOSED BULKHEAD WALL DESIGNATED AS "NOT IN CONTRACT" HAVE BEEN EXCLUDED FROM THE TABULATION OF QUANTITIES SHOWN ON SHEETS 1, 35 AND 37. FOR BIDDING PURPOSES, THE CONTRACTOR SHALL BID ONLY ON THE BULKHEAD WALL QUANTITIES SHOWN. DURING CONSTRUCTION, INCREASED QUANTITIES MAY BE REQUIRED TO COMPLETE "NOT IN CONTRACT" PORTIONS OF THE WORK AND SHALL BE COMPLETED AS DIRECTED BY THE COUNTY AT THE CONTRACT UNIT BID PRICES.
5. SEE ADDITIONAL PAY ITEM NOTES ON SHEETS FOR EACH STRUCTURE.

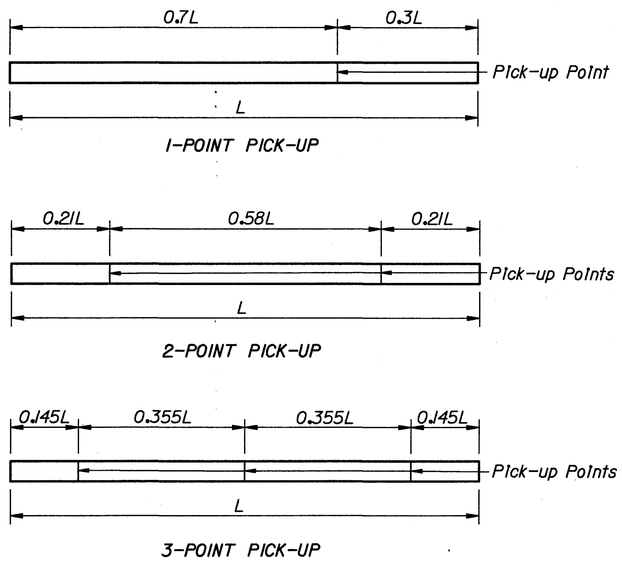

PILE PICK-UP DETAILS

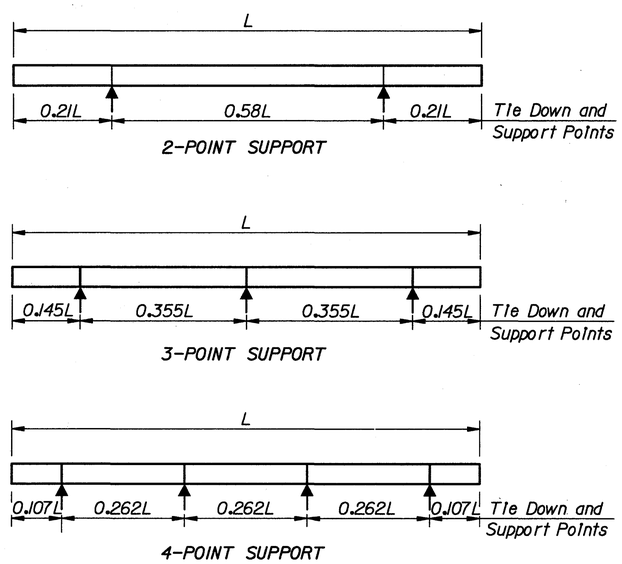

STORAGE AND TRANSPORTATION SUPPORT DETAILS

TABLE OF MAXIMUM PILE PICK-UP AND SUPPORT LENGTHS								
	Square Pile Size (Inches)						Required Storage and Transportation Detail	Pick-Up Detail
	12	14	18	20	24	30		
Maximum Pile Length (Feet)	48	52	59	62	68	87	2, 3, or 4 point	1 Point
	69	75	85	89	98	124	2, 3, or 4 point	2 Point
	99	107	121	128	140	178	3 or 4 point	3 Point

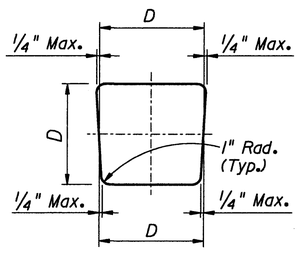

TYPICAL PILE SHAPE FOR MOLD FORMS

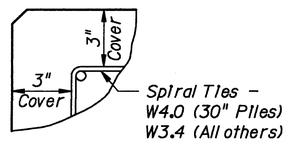

DETAIL SHOWING TYPICAL COVER

PRESTRESSED CONCRETE PILE GENERAL NOTES

DESIGN SPECIFICATIONS:

Florida Department of Transportation (FDOT) "Structures Design Guidelines for Load and Resistance Factor Design", Including all supplements thereto.

The Florida Department of Transportation "Standard Specifications for Road and Bridge Construction", 2000.

American Association of State Highway and Transportation Officials (AASHTO) "LRFD Bridge Design Specifications".

DESIGN PARAMETERS:

Square Prestressed Concrete Section: 1,000 psi uniform compression after prestress losses w/0.0 loads.

Pick-up, Storage, and Transportation: 0.0 psi tension w/1.5 times pile self weight.

SPIRAL TIES:

Each wrap of spirals shall be tied to at least two corner strands. One turn required for spiral splices.

CONCRETE CLASS:

Concrete for all piles shall be Class V (Special), except that piles in pile bents only, and in an environment classified as extremely aggressive shall be Class V (Special) with microsilica.

CONCRETE STRENGTH:

The cylinder strength shall be 6,000 psi minimum at 28 days and 4,000 psi minimum at time of transfer of the Prestressing Force.

SPLICE BONDING MATERIAL:

The adhesive bonding material to fill dowel holes and form the joint between pile sections shall conform to Section 937 of the Specifications and shall be contained on the Qualified Products List (QPL).

PICK-UP POINTS:

Piles shall be marked at the pick-up points to indicate proper points for attaching handling lines.

REINFORCING STEEL:

All reinforcing steel shall be Grade 60, except that spiral ties shall be manufactured from cold-drawn steel wire meeting the requirements of ASTM A82.

PRESTRESSING STEEL:

Prestressing steel shall be seven-wire strand, Grade 270 or 250 as noted.
S.R. = Stress Relieved Strand
L.R.S. = Low-Relaxation Strand

REVISIONS

DATE	BY	DESCRIPTION	DATE	BY	DESCRIPTION

	NAMES	DATES
DRAWN BY	J.M.B.	3/00
CHECKED BY	G.J.R.	3/00
DESIGNED BY	G.J.R.	3/00
CHECKED BY	P.W.B.	3/00
APPROVED BY	G.J. Roufa	

ENGINEER OF RECORD:
STRUCTURES DESIGN OFFICE
CENTRAL OFFICE
605 Suwannee Street, MS 33
Tallahassee, Florida 32399-0450

FLORIDA DEPARTMENT OF TRANSPORTATION

ROAD NO.	COUNTY	FINANCIAL PROJECT ID

SHEET TITLE: GENERAL NOTES AND DETAILS FOR PRESTRESSED CONCRETE PILES - INDEX NO. 600

PROJECT NAME: FORT DESOTO WATER CIRCULATION IMPROVEMENTS

SHEET NO. 3

F:\BRIDGES\FORT DESOTO\WATER CIRCULATION IMPROVEMENTS\FDOTSTDS\600WCI.DGN

02/25/03 3:21:06 PM

NOTES:

1. For Sections D-D, E-E, & F-F see Index 612, 614, 618, 620, 624 or 630 for applicable concrete pile size.
2. Prestressing strands, spiral ties and/or reinforcement are not shown for clarity.
3. In cases where pile splices are desired due to length limitations in shipping and/or handling, the" Drivable Pre-Planned Prestressed Precast Splice Detail" shall be used. Mechanical Pile Splices contained on the Qualified Products List (QPL) may also be used.
4. 30" sq. piles subject to high lateral loads including Vessel Collision shall have a dowel extension of 4'-0" as shown, and shall have a concrete collar as detailed. Collar concrete shall reach a strength of 6,000 psi before pile driving is resumed.
5. When preformed dowel holes are utilized, the 1" spiral tie pitch shall be continued to 4'-0" below the head of the pile, and the preforming material shall be removed.

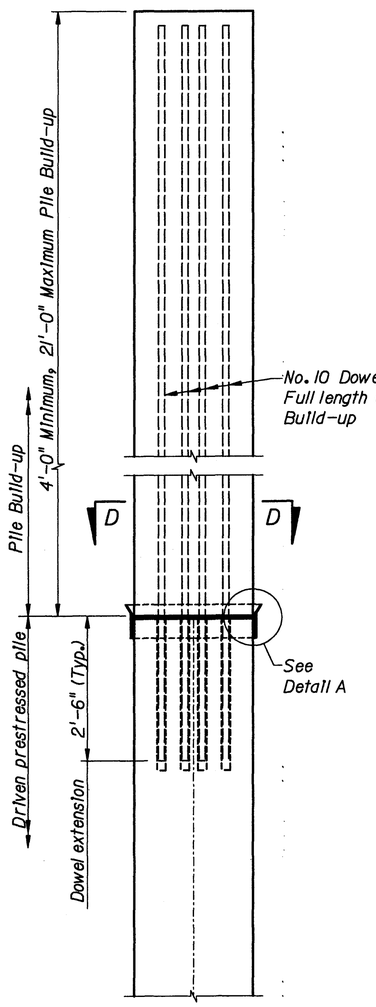

NON-DRIVABLE UNFORESEEN REINFORCED PRECAST PILE BUILD-UP DETAIL

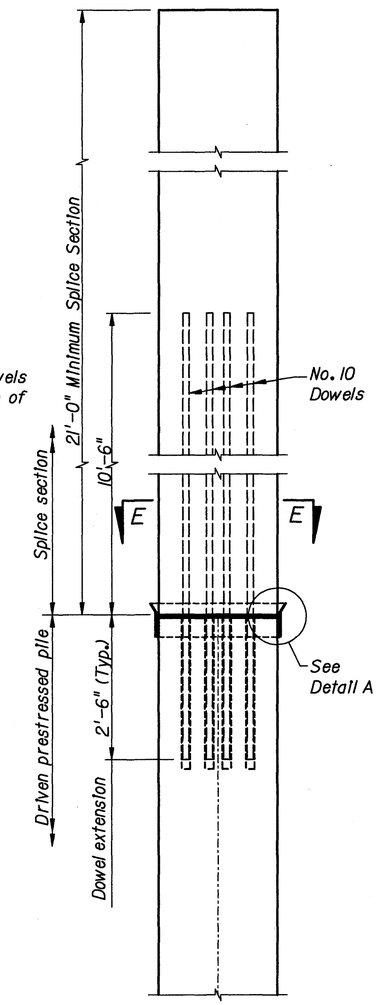

DRIVABLE UNFORESEEN PRESTRESSED PRECAST PILE SPLICE DETAIL

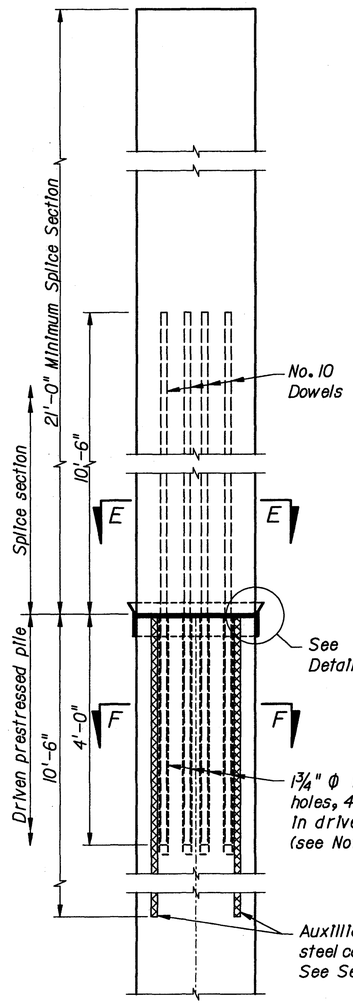

DRIVABLE PRE-PLANNED PRESTRESSED PRECAST PILE SPLICE DETAIL

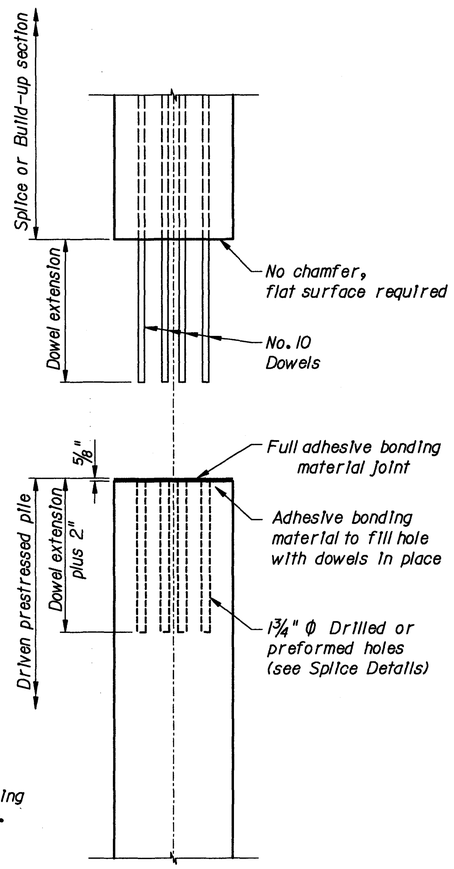

TYPICAL SPLICE BEFORE BONDING

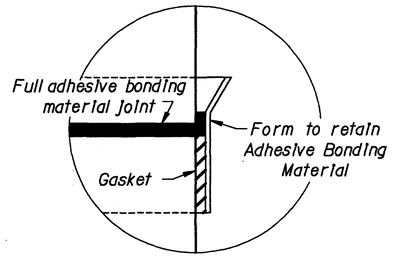

DETAIL A

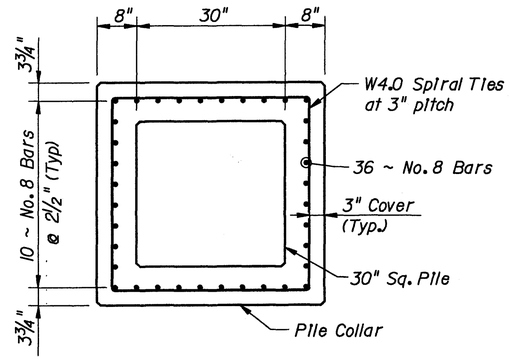

SECTION THRU PILE COLLAR

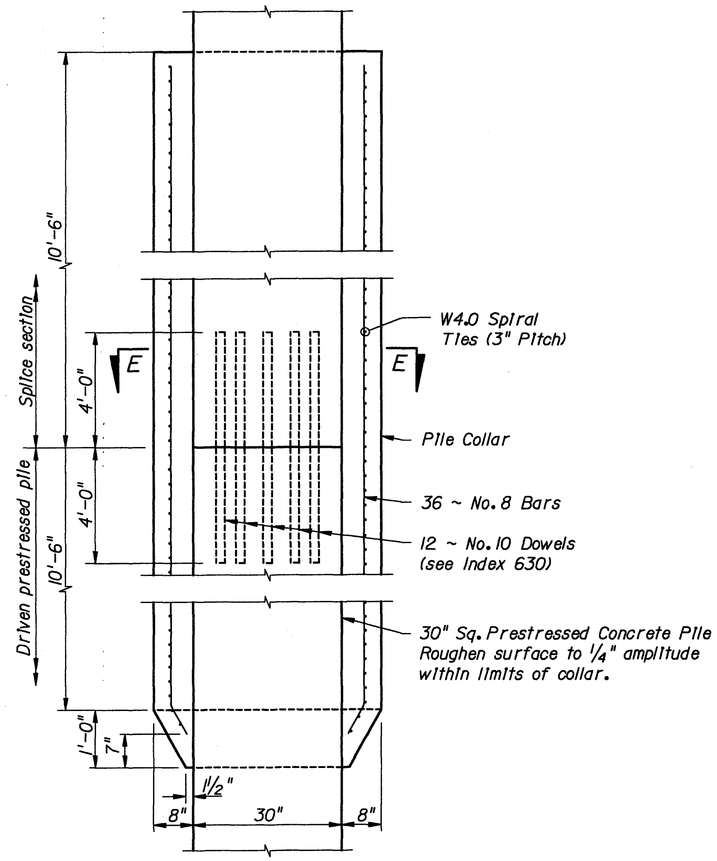

DETAIL OF PILE COLLAR FOR 30" PRESTRESSED PILE (For High Lateral Load Conditions Including Vessel Collision)

REVISIONS					
DATE	BY	DESCRIPTION	DATE	BY	DESCRIPTION

	NAMES	DATES
DRAWN BY	J.M.B.	3/00
CHECKED BY	G.J.R.	3/00
DESIGNED BY	G.J.R.	3/00
CHECKED BY	P.W.B.	3/00
APPROVED BY	G.J. Roufa	

ENGINEER OF RECORD:
STRUCTURES DESIGN OFFICE
CENTRAL OFFICE
605 Suwannee Street, MS 33
Tallahassee, Florida 32399-0450

FLORIDA DEPARTMENT OF TRANSPORTATION

ROAD NO.	COUNTY	FINANCIAL PROJECT ID

SHEET TITLE: PRESTRESSED CONCRETE PILE SPLICES INDEX NO. 601

PROJECT NAME: FORT DESOTO WATER CIRCULATION IMPROVEMENTS

SHEET NO. 4

E:\BRIDGES\FORT DESOTO\WATER CIRCULATION IMPROVEMENTS\FDOTSTDS\601W01.DGN

02/25/03 3:21:07 PM

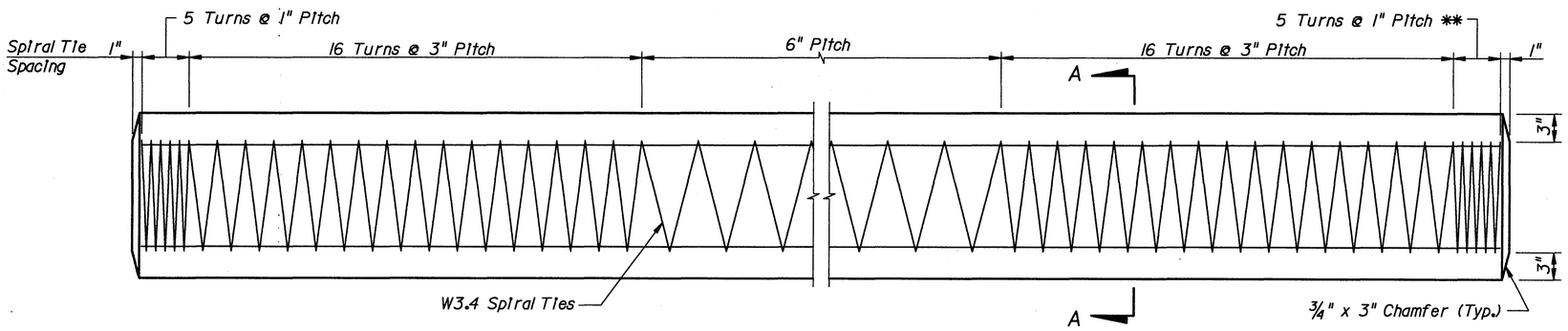

ELEVATION

** See Note No. 5 on Index 601

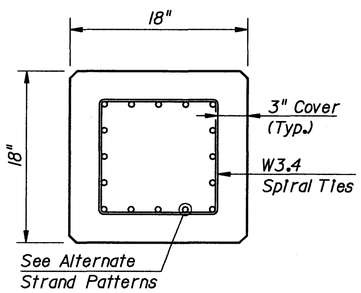

SECTION A-A

ALTERNATE STRAND PATTERNS

12 ~ 0.6" Φ, Grade 270 LRS, at 38.1 kips
12 ~ 1/2" Φ, Grade 270 (Spec) LRS, at 34.0 kips
12 ~ 9/16" Φ, Grade 270 SR, at 35.1 kips
16 ~ 1/2" Φ, Grade 270 SR, at 26.8 kips
20 ~ 7/16" Φ, Grade 270 SR, at 21.8 kips
20 ~ 7/16" Φ, Grade 270 LRS, at 21.1 kips
24 ~ 3/8" Φ, Grade 270 LRS, at 17.3 kips

NOTE:
Any of the given Alternate Strand Patterns may be utilized.
The strands shall be located as follows:
Place one strand at each corner and place the remaining strands equally spaced between the corner strands.
The total strand pattern shall be concentric with the nominal concrete section of the pile.

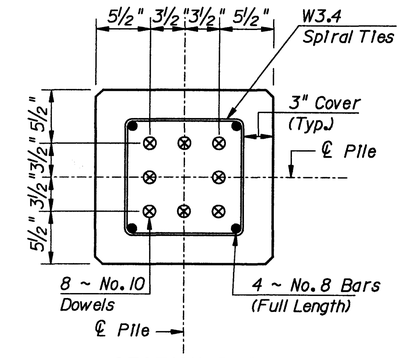

SECTION D-D
(See Non-Drivable Unforeseen Reinforced Precast Splice Detail)

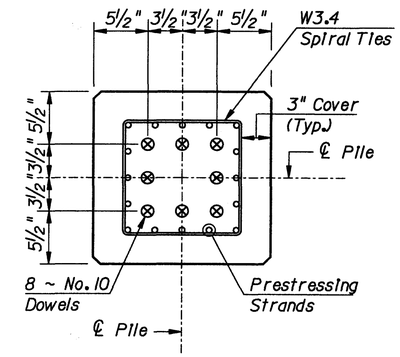

SECTION E-E
(See Drivable Prestressed Precast Splice Detail)

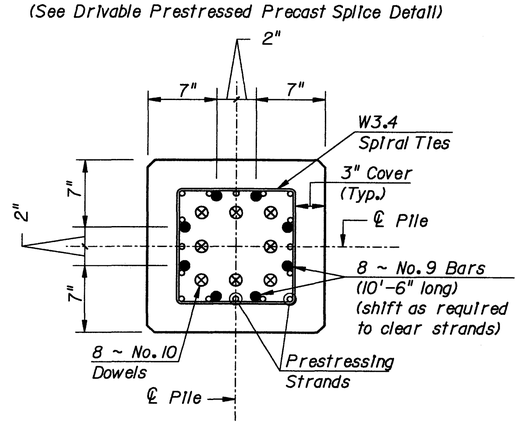

SECTION F-F
(See Drivable Pre-Planned Splice Detail)

* PILE SPLICE REINFORCEMENT DETAILS

* Work these details with Prestressed Concrete Pile Splices, Index 601.

REVISIONS					
DATE	BY	DESCRIPTION	DATE	BY	DESCRIPTION

	NAMES	DATES
DRAWN BY	J.M.B.	3/00
CHECKED BY	G.J.R.	3/00
DESIGNED BY	G.J.R.	3/00
CHECKED BY	P.W.B.	3/00
APPROVED BY	G.J. Roufa	

ENGINEER OF RECORD:
STRUCTURES DESIGN OFFICE
CENTRAL OFFICE
605 Suwannee Street, MS 33
Tallahassee, Florida 32399-0450

FLORIDA DEPARTMENT OF TRANSPORTATION

ROAD NO.	COUNTY	FINANCIAL PROJECT ID

SHEET TITLE: 18" SQ. PRESTRESSED CONCRETE PILES INDEX NO. 618

PROJECT NAME: FORT DESOTO WATER CIRCULATION IMPROVEMENTS

SHEET NO. 5

02/25/03 3:21:07 PM

F:\BRIDGES\FORT DESOTO\WATER CIRCULATION IMPROVEMENTS\FDOTSTDS\61RWCI.DGN

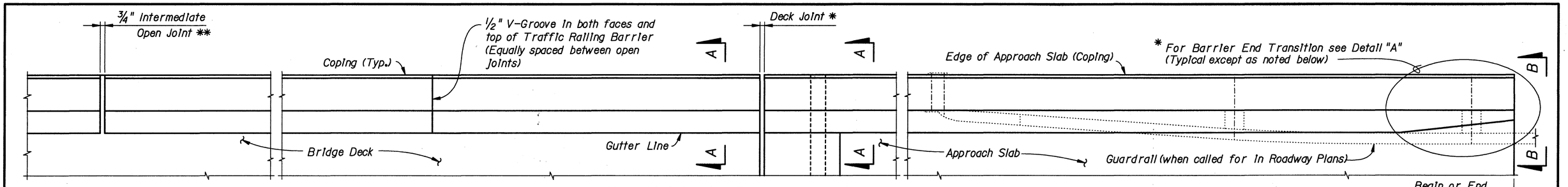

PLAN (Reinforcing Steel not shown for clarity)

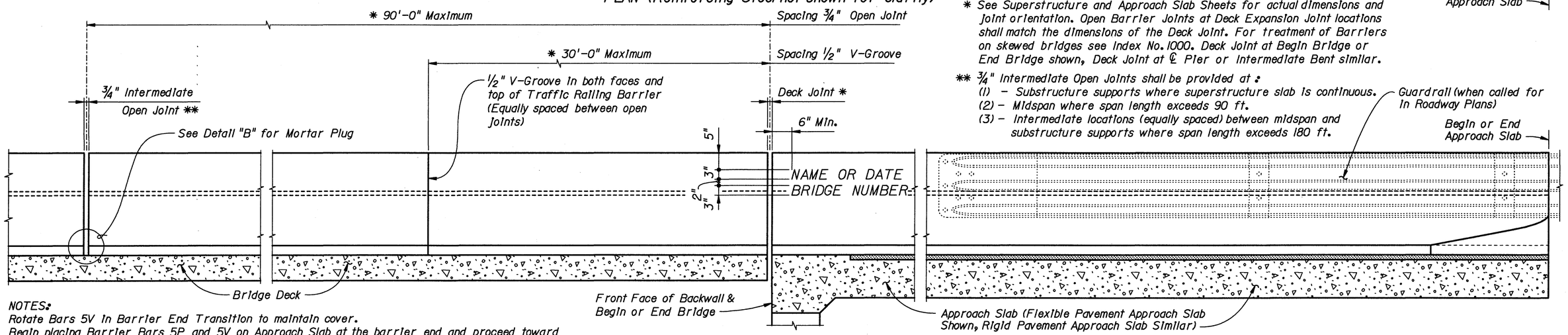

* See Superstructure and Approach Slab Sheets for actual dimensions and joint orientation. Open Barrier Joints at Deck Expansion Joint locations shall match the dimensions of the Deck Joint. For treatment of Barriers on skewed bridges see Index No. 1000. Deck Joint at Begin Bridge or End Bridge shown, Deck Joint at ℄ Pier or Intermediate Bent similar.

** 3/4" Intermediate Open Joints shall be provided at:
(1) – Substructure supports where superstructure slab is continuous.
(2) – Midspan where span length exceeds 90 ft.
(3) – Intermediate locations (equally spaced) between midspan and substructure supports where span length exceeds 180 ft.

ELEVATION OF INSIDE FACE OF BARRIER
(Reinforcing Steel not shown for clarity)

NOTES:
Rotate Bars 5V in Barrier End Transition to maintain cover.
Begin placing Barrier Bars 5P and 5V on Approach Slab at the barrier end and proceed toward Begin or End Bridge to ensure placement of guardrail bolt holes. If required, adjustments to the bar spacing for Bars 5P and 5V shall be made immediately adjacent to Begin or End Bridge.

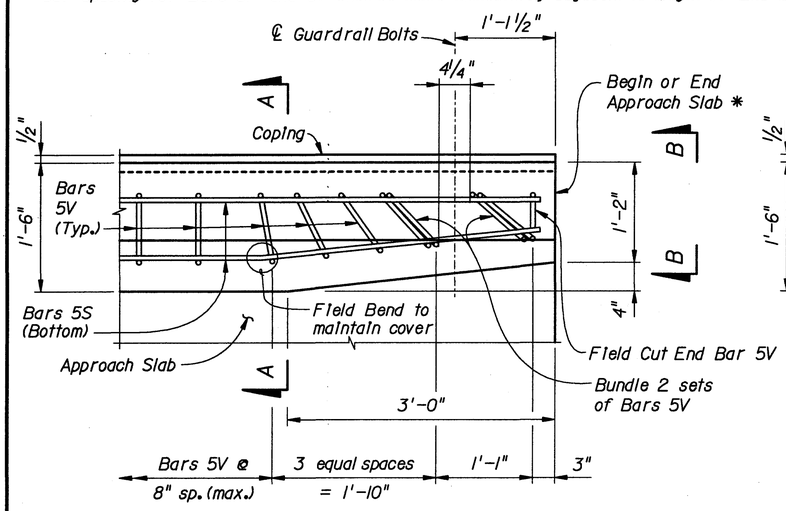

PLAN – Barrier End Transition
(Showing Bars 5V and 5S)

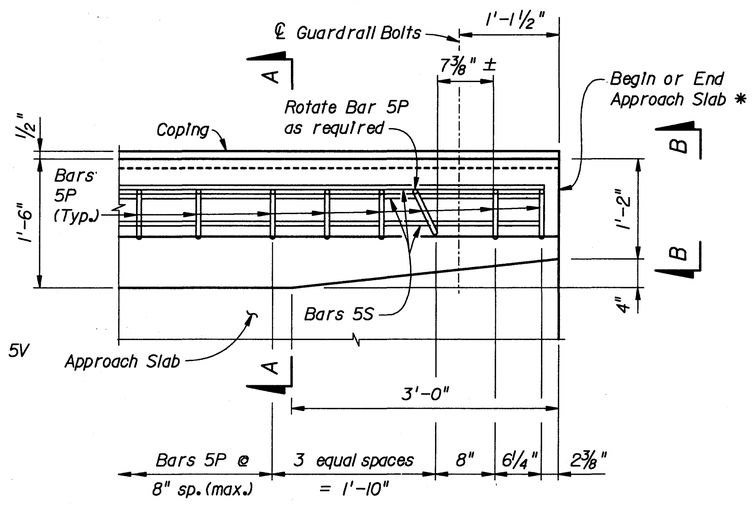

PLAN – Barrier End Transition
(Showing Bars 5P and 5S)

DETAIL "A"

NOTE: Omit Barrier End Transition and Guardrail if Concrete Barrier Wall is used beyond the Approach Slab. See the Plan and Elevation Sheet and Roadway Plans. If Barrier End Transition is omitted, extend Typical Section to end of the Approach Slab and Space Bars 5P and 5V at 8" (Typ.)

TRAFFIC RAILING BARRIER NOTES

This railing has been structurally evaluated to be equivalent or greater in strength to other safety shape railings which have been crash tested to NCHRP Report 350 TL-4 Criteria.

CONCRETE AND REINFORCING STEEL: See General Notes.

MARKERS: Elevation Markers shall be placed on top of the Traffic Railing Barrier at the end bents. On bridges longer than 100 ft. one marker shall be placed at each end of the bridge. On bridges 100 ft. or less one marker shall be placed at one end of the bridge only. Markers are to be furnished by the Florida Department of Transportation and installed by the Contractor. The cost of installing the markers shall be included in the Contract Unit Price for the Traffic Railing Barrier.

GUARDRAIL: For Guardrail connection details see Roadway and Traffic Design Standards Index No. 400.

SUPERELEVATED BRIDGES: At the option of the Contractor the Traffic Railing Barrier on superelevated bridges may be constructed perpendicular to the roadway surface. The cost of all modifications will be at the Contractor's expense.

BARRIERS ON RETAINING WALLS: If the Traffic Railing Barrier is to be provided on a retaining wall, the barrier section will be the same as shown on Index No. 700, Drawing 2 of 2. All other details such as the guardrail transition attachment, the maximum spacing of the 3/4" open joints and 1/2" V-groove shall apply.

NAME, DATE AND BRIDGE NUMBER: The Name and Bridge Number shall be placed on the Traffic Railing Barrier so as to be seen on the driver's right side when approaching the bridge. The Date shall be placed on the driver's left side when approaching the bridge. The Date shall be the year the bridge is constructed. For a major widening the date shall be the year of the widening. Black plastic letters and figures 3" in height may be used, as approved by the Engineer, in lieu of the letters and figures formed by 3/8" V-Grooves. V-Grooves shall be formed by preformed letters and figures.

PEDESTRIAN AND BICYCLE RAILING: See Index Nos. 810 and 820 for Notes, Details and post spacings for Traffic Railing Barriers with Aluminum Pedestrian /Bicycle Bullet Railings.

CROSS REFERENCE:
For Section A-A, View B-B and Detail "B", see Index No. 700, Drawing 2 of 2.

REVISIONS					
DATE	BY	DESCRIPTION	DATE	BY	DESCRIPTION

	NAMES	DATES
DRAWN BY	MDM	5-00
CHECKED BY	CEB	5-00
DESIGNED BY	CEB	5-00
CHECKED BY	MDM	5-00
APPROVED BY	REN	

ENGINEER OF RECORD:
STRUCTURES DESIGN OFFICE
CENTRAL OFFICE
605 Suwannee Street, MS 33
Tallahassee, Florida 32399-0450

FLORIDA DEPARTMENT OF TRANSPORTATION

ROAD NO.	COUNTY	FINANCIAL PROJECT ID.

SHEET TITLE: TRAFFIC RAILING BARRIER – (32" F SHAPE) INDEX NO. 700 (DRAWING 1 OF 2)

PROJECT NAME: FORT DESOTO WATER CIRCULATION IMPROVEMENTS

SHEET NO. 6

F:\BRIDGES\FORT DESOTO\WATER CIRCULATION IMPROVEMENTS\FDOTSTDS\700-1OF2WCI.DGN

02/25/03 3:21:07 PM

ALTERNATE REINFORCING STEEL (WELDED WIRE FABRIC) DETAILS

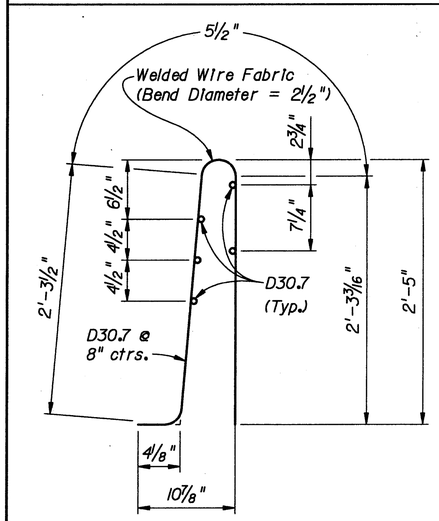

Welded Wire Fabric (WWF)
Piece No. 2

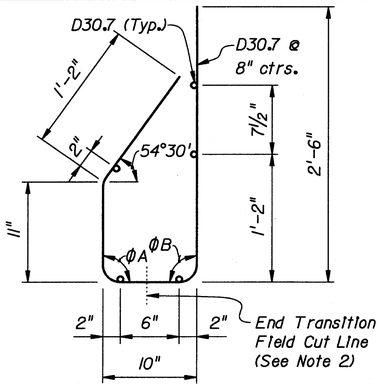

Welded Wire Fabric (WWF)
Piece No. 1

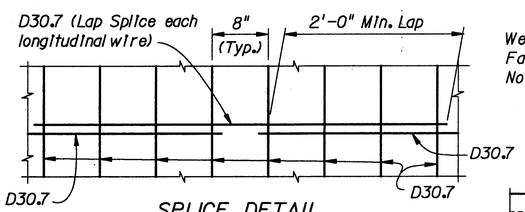

SPLICE DETAIL
(Between WWF Sections)

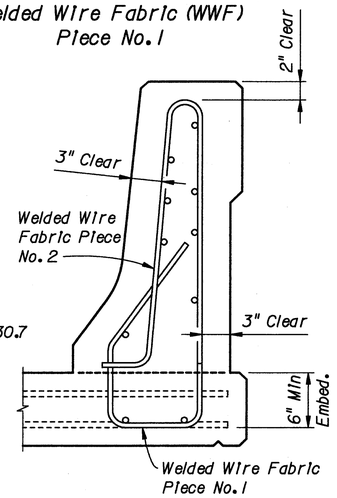

WELDED WIRE FABRIC NOTES:

1. At the option of the Contractor Welded Wire Fabric (WWF) may be utilized in lieu of all Bars 5P, 5S and 5V. Welded Wire Fabric shall conform to ASTM A497.
2. Welded Wire Fabric at Barrier End Transition shall be field bent inward as required (Pieces 1 & 2) to maintain cover. The vertical wires (D30.7) in Piece 1 shall be cut as shown and the gutter side portion bent inward as required to allow placement.

CONVENTIONAL REINFORCING STEEL BENDING DIAGRAMS

BILL OF REINFORCING STEEL

MARK	SIZE	LENGTH
P	5	5'-7"
S	5	AS REQ'D
V	5	5'-5"

ROADWAY CROSS-SLOPE	LOW GUTTER		HIGH GUTTER	
	ΦA	ΦB	ΦA	ΦB
0% to 2%	90°	90°	90°	90°
2% to 6%	93°	87°	87°	93°
6% to 10%	96°	84°	84°	96°

ΦA and ΦB shall be 90° if Contractor elects to place Barrier Perpendicular to the Deck.

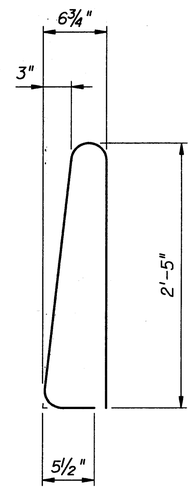

STIRRUP BAR 5P

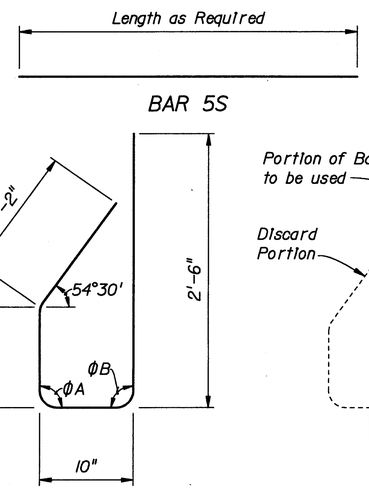

STIRRUP BAR 5V

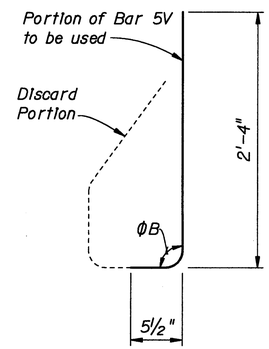

END STIRRUP BAR 5V
To Be Field Cut
(One Required per
Barrier End Transition)

REINFORCING STEEL NOTES:

1. All bar dimensions in the bending diagrams are out to out.
2. The 9" and the 2'-4" vertical dimensions shown for Bar 5V are based on a bridge deck without a raised sidewalk. If a raised sidewalk is to be provided, increase these dimensions to achieve a 6" minimum embedment into the bridge deck. See the Superstructure and Approach Slab Sheets.
3. The reinforcement for the barrier on a retaining wall shall be the same as detailed above for a 8" deck with ΦA = ΦB = 90°
4. All reinforcing steel at the open joints shall have a 2" minimum cover.
5. Bars 5S may be continuous or spliced at the construction joints. Bar splices for Bars 5S shall be a minimum of 2'-0".

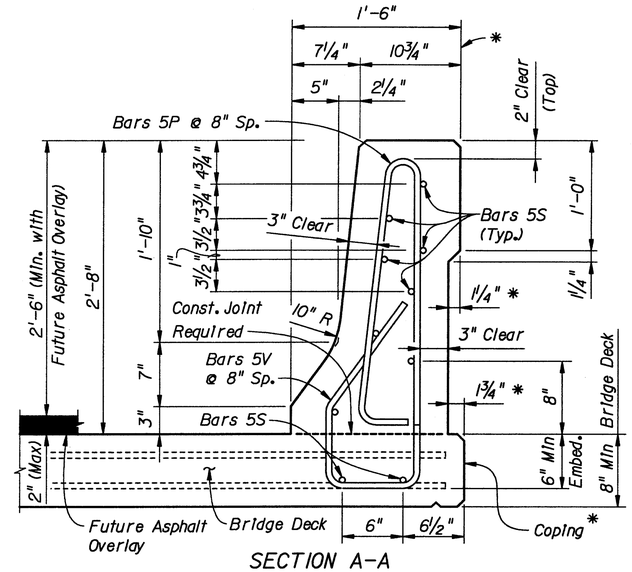

SECTION A-A
TYPICAL SECTION THRU TRAFFIC RAILING BARRIER
(SECTION THRU BRIDGE DECK SHOWN -
SECTION THRU APPROACH SLAB SIMILAR)

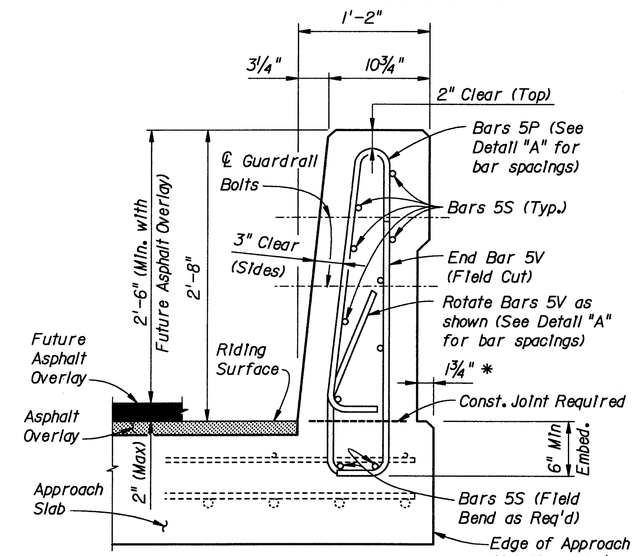

VIEW B-B

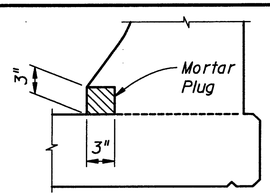

DETAIL "B" - SECTION
AT INTERMEDIATE OPEN JOINT

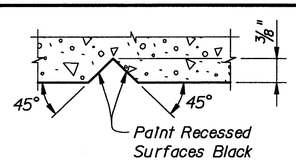

SECTION THRU RECESSED
"V" GROOVE TO FORM INSCRIBED
LETTERS AND FIGURES

NOTE:
At Intermediate Open Joints, the lower 3" portion of the open joint shall be plugged by filling it with mortar in accordance with Section 400 of the Specifications

* Where barriers of adjacent bridges are to be built back to back, the outside vertical plane of the barrier and deck may coincide. If shown on the Superstructure Sheets, a bond breaker will be required. See this detail on the Superstructure Sheets.

ESTIMATED TRAFFIC RAILING BARRIER QUANTITIES

ITEM	UNIT	QUANTITY
Concrete	C.Y./FT.	0.104
Reinforcing Steel	LB./FT.	27.64

(The above quantities are based 2% deck cross slope; barrier on low side of deck.)

CROSS REFERENCE:
For Detail "A" and locations of Section A-A, View B-B and Detail "B", see Index No. 700, Drawing 1 of 2.

REVISIONS	BY	DATE
1 XXXXXXXXXX	---	---

SURVEY BOOK No.:		
SURVEY DIVISION	BY	DATE
SURVEYED	---	---
TECHNICIAN	---	---
CHECKED	---	---
DESIGN DIVISION		
DESIGNED	MCM	7/01
DRAWN	JBH	7/01
CHECKED	MCM	7/01

PINELLAS COUNTY, FLORIDA
Public Works

LAND SURVEY DIVISION
22211 U.S. HWY. 19 NORTH
CLEARWATER, FLORIDA 33765-2347
PHONE (727) 464-8904

ENGINEERING DEPARTMENT
440 COURT STREET
CLEARWATER, FLORIDA 33756-5136
PHONE (727) 464-3251

MURRAY C. McDONOUGH FLORIDA REGISTERED PROFESSIONAL ENGINEER No. 43353 DATE 2/25/03

FORT DESOTO
WATER CIRCULATION
IMPROVEMENTS

TRAFFIC RAILING BARRIER (32" F SHAPE)
INDEX NO. 700 (DRAWING 2 OF 2)

DATE: FEBRUARY, 2003
PROJECT ID NO.: 921573
SURVEY FILE NO.: N/A
SHEET 7 OF 42
FILE: ...\700-2OF2WC
VIEW: PLOT

e:\bridges\fort desoto\water circulation improvements\fdotstds\700-2of2wc1.dg

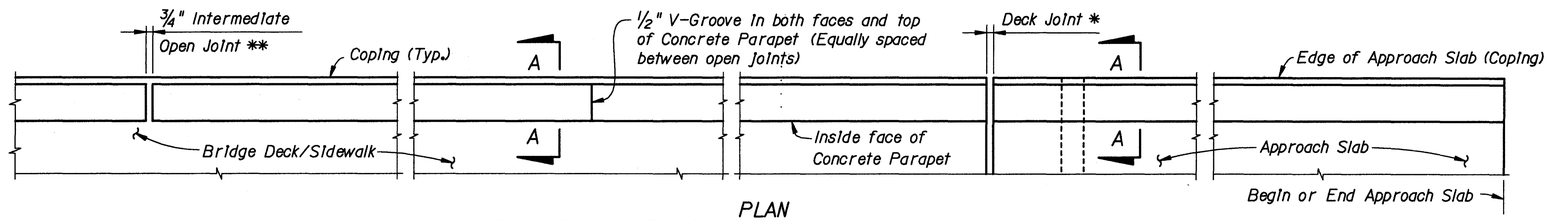

PLAN
(Rails, Posts & Reinforcing Steel not shown for clarity)

** 3/4" Intermediate Open Joints shall be provided at locations coinciding with 3/4" Joints for the Traffic Railing Barrier.

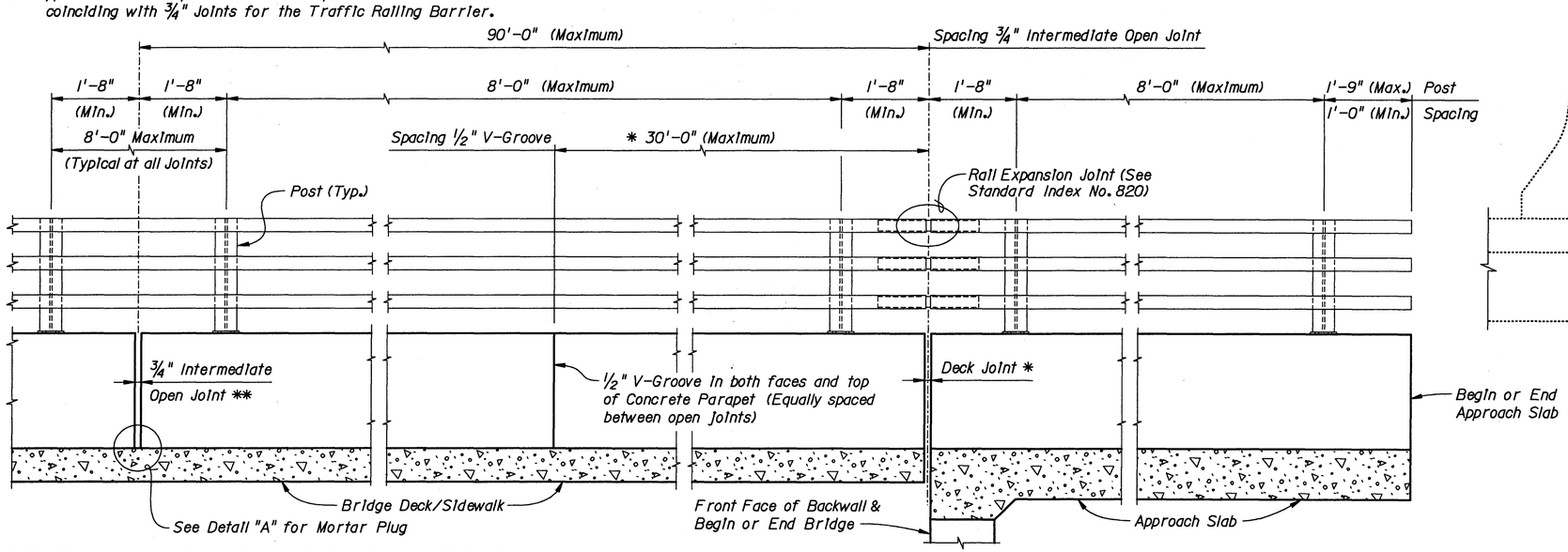

ELEVATION OF INSIDE FACE OF RAILING
(Reinforcing Steel not shown for clarity)

* See Superstructure Sheets for actual dimensions and joint orientation. Open Parapet Joints at Deck Expansion Joint locations shall match the dimension of the Deck Joint. For treatment of Railings on skewed bridges see Standard Index No. 1000. Deck Joint at Begin Bridge or End Bridge shown. Deck Joint at ℄ Pier or Intermediate Bent similar.

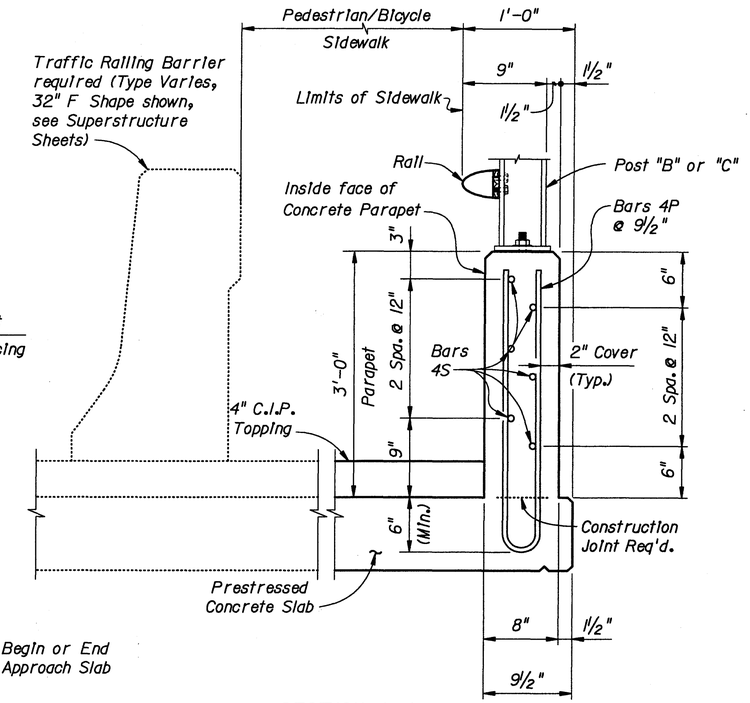

SECTION A-A
(Typical Section Thru Bridge Deck Shown, Section Thru Approach Slab Similar)

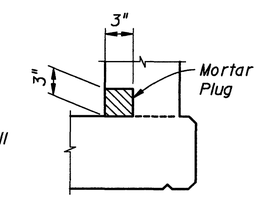

DETAIL "A" - SECTION
AT INTERMEDIATE OPEN JOINT

NOTE:
At Intermediate Open Joints, the lower 3" portion of the open joint shall be plugged by filling it with mortar in accordance with Section 400 of the Specifications.

BILL OF REINFORCING STEEL		
MARK	SIZE	LENGTH
P	4	6'-11"
S	4	AS REQ'D

BENDING DIAGRAMS

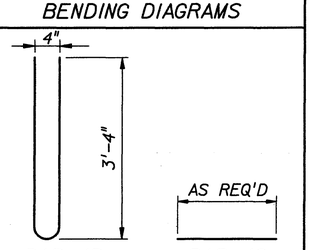

BAR 4P BAR 4S

ESTIMATED CONCRETE PARAPET QUANTITIES		
ITEM	UNIT	QUANTITY
Concrete	C.Y./FT.	0.074
Reinforcing Steel	LB./FT.	9.58

(The above quantities are based on deck with a 2% cross slope)

REINFORCING STEEL NOTES:

1. All bar dimensions in the bending diagrams are out to out.
2. The reinforcement for the parapet on a retaining wall shall be the same as detailed above for a 8" deck.
3. All reinforcing steel at the open joints shall have a 2" minimum cover.
4. Bars 4S may be continuous or spliced at the construction joints. Bar splices for Bars 4S shall be a minimum of 1'-9".

PEDESTRIAN/BICYCLE RAILING NOTES:

CONCRETE PARAPET: Concrete parapet shall be placed vertical and top surface shall be level transversely.
RAIL AND POST DETAILS: For Rail, Post, Rail Expansion Joint fabrication and installation details and notes see Index No. 820.

REVISIONS	BY	DATE

SURVEY BOOK No.:		
SURVEY DIVISION	BY	DATE
SURVEYED	---	---
TECHNICIAN	---	---
CHECKED	---	---
DESIGN DIVISION		
DESIGNED	MCM	7/01
DRAWN	JBH	7/01
CHECKED	MCM	7/01

PINELLAS COUNTY, FLORIDA
Public Works

LAND SURVEY DIVISION
22211 U.S. HWY. 19 NORTH
CLEARWATER, FLORIDA 33765-2347
PHONE (727) 464-8904

ENGINEERING DEPARTMENT
440 COURT STREET
CLEARWATER, FLORIDA 33756-5136
PHONE (727) 464-3229

MURRAY C. McDONOUGH FLORIDA REGISTERED PROFESSIONAL ENGINEER No. 43353 — DATE 2/25/03

FORT DESOTO
WATER CIRCULATION IMPROVEMENTS

PEDESTRIAN / BICYCLE RAILING
INDEX NO. 800

DATE: FEBRUARY, 2003
PROJECT ID NO.: 921573
SURVEY FILE NO.: N/A
SHEET 8 OF 42
FILE: ...\800WC1.DGN
VIEW: PLOT

e:\bridges\fort desoto\water circulation improvements\fdotstds\800wc1.dg

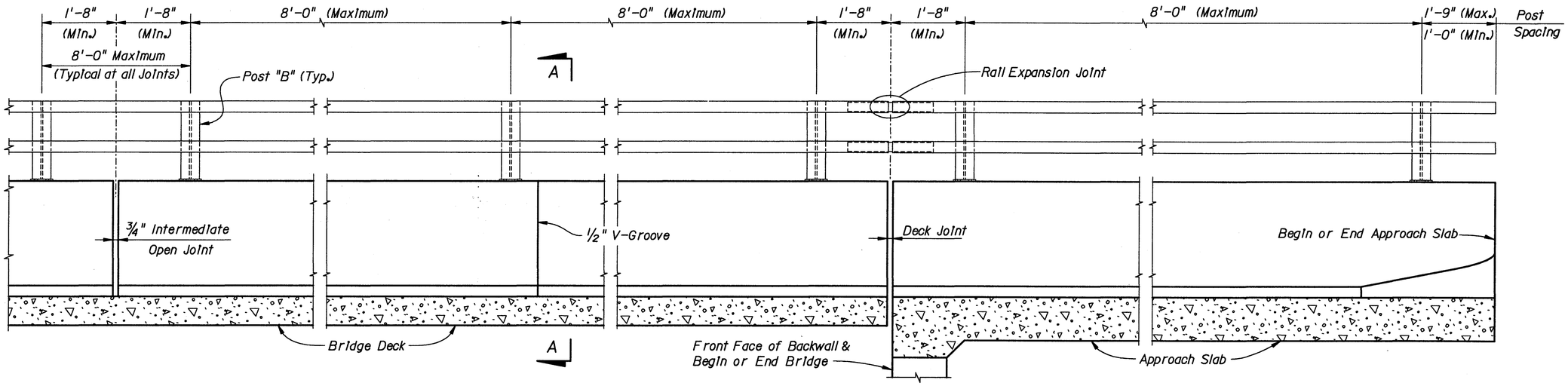

ELEVATION OF INSIDE FACE OF TRAFFIC RAILING BARRIER WITH BICYCLE BULLET RAILING

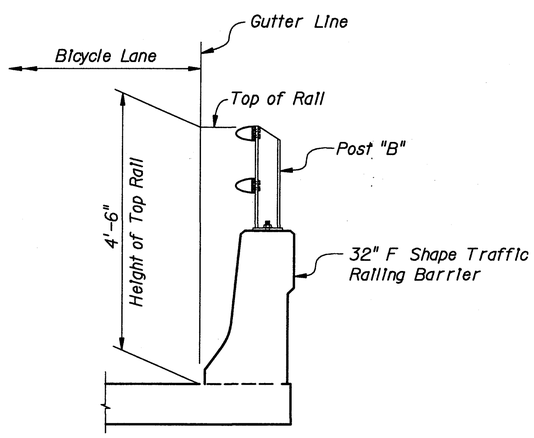

SECTION A-A
TYPICAL SECTION THRU BRIDGE DECK
(APPROACH SLAB SIMILAR)

NOTES:

BICYCLE RAILING: Railing shown above (see Section A-A) is intended to be used where a Bicycle Lane is required and a raised pedestrian sidewalk is not required.

RAIL AND POST DETAILS: For Post, Rail and Rail Expansion Joint fabrication and installation Details and Notes see Index No. 820.

TRAFFIC RAILING BARRIER DETAILS: For Traffic Railing Barrier Details, Reinforcement and Notes see Index No. 700.

REVISIONS					
DATE	BY	DESCRIPTION	DATE	BY	DESCRIPTION

	NAMES	DATES
DRAWN BY	JLF	5-00
CHECKED BY	CEB	5-00
DESIGNED BY	SJN	5-00
CHECKED BY	MDM	5-00
APPROVED BY	REN	

ENGINEER OF RECORD:
STRUCTURES DESIGN OFFICE
CENTRAL OFFICE
605 Suwannee Street, MS 33
Tallahassee, Florida 32399-0450

FLORIDA DEPARTMENT OF TRANSPORTATION

ROAD NO.	COUNTY	FINANCIAL PROJECT ID.

SHEET TITLE: ALUMINUM PEDESTRIAN/BICYCLE BULLET RAILING FOR TRAFFIC RAILING BARRIER (32" F SHAPE) INDEX NO. 810

PROJECT NAME: FORT DESOTO WATER CIRCULATION IMPROVEMENTS

SHEET NO. 9

02/25/03 3:21:08 PM

F:\BRIDGES\FORT DESOTO\WATER CIRCULATION IMPROVEMENTS\FDOTSTDS\810WCI.DGN

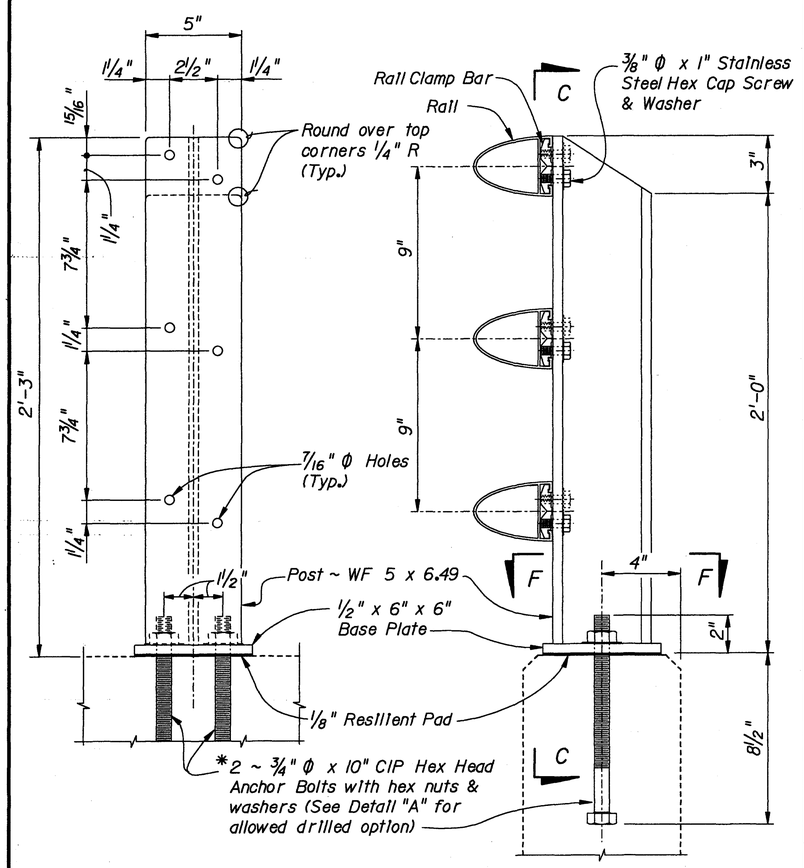

SECTION C-C
(RAILS NOT SHOWN)

ELEVATION
OF POST "A"

POST "A" DETAILS FOR PEDESTRIAN/BICYCLE RAILING
(INDEX NO. 800)

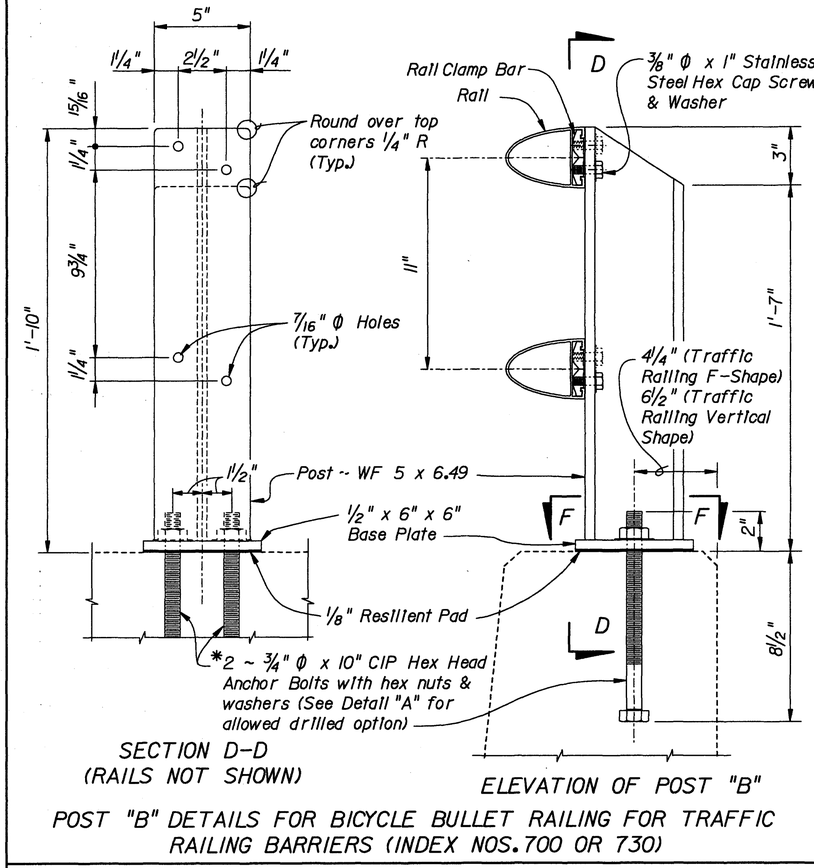

SECTION D-D
(RAILS NOT SHOWN)

ELEVATION OF POST "B"

POST "B" DETAILS FOR BICYCLE BULLET RAILING FOR TRAFFIC RAILING BARRIERS (INDEX NOS. 700 OR 730)

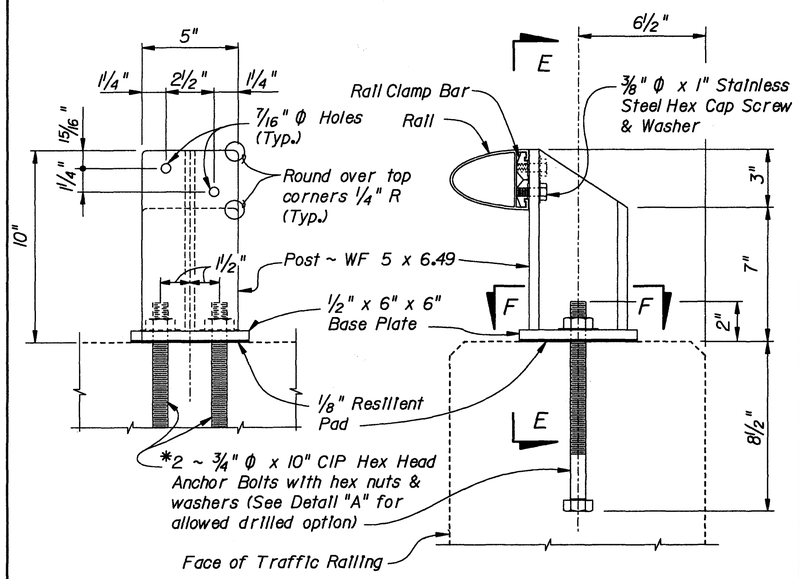

SECTION E-E
(RAIL NOT SHOWN)

ELEVATION
OF POST "C"

POST "C" DETAILS FOR PEDESTRIAN BULLET RAILING FOR TRAFFIC RAILING BARRIERS (INDEX NO. 730)

*NOTE: After nuts have been tightened, the bolt threads shall be deformed to prevent removal of nuts.

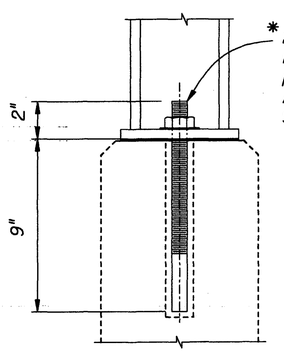

*2 ~ ¾" Φ x 11" Adhesive Anchor Bolts with hex nuts and washers set in drilled holes (diameter per manufacturer's recommendation) with an Adhesive Bonding System in accordance with Sections 416 and 937 of the Specifications.

ALTERNATE ANCHOR BOLT DETAIL "A"
(HANDRAIL PARAPET SHOWN,
TRAFFIC RAILINGS SIMILAR)

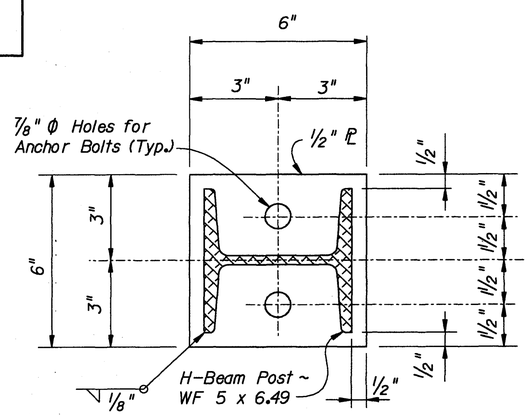

SECTION F-F
BASE PLATE DETAIL

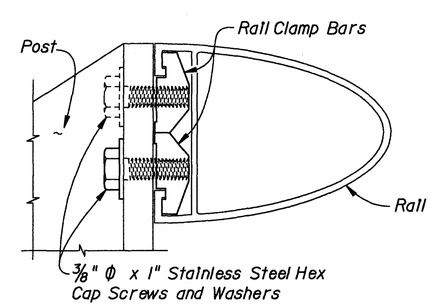

RAIL TO POST CONNECTION DETAIL

CROSS REFERENCES:

For Post "A" spacing see Structures Index No. 800.

For Post "B" & Post "C" spacing see Structures Index Nos. 700 or 730.

For Rail Details and Notes see Index No. 820, Drawing 2 or 2.

REVISIONS					
DATE	BY	DESCRIPTION	DATE	BY	DESCRIPTION

	NAMES	DATES
DRAWN BY	JLF	5-00
CHECKED BY	SJN	5-00
DESIGNED BY	SJN	5-00
CHECKED BY	MDM	5-00
APPROVED BY	REN	

ENGINEER OF RECORD.
STRUCTURES DESIGN OFFICE
CENTRAL OFFICE
605 Suwannee Street, MS 33
Tallahassee, Florida 32399-0450

FLORIDA DEPARTMENT OF TRANSPORTATION

ROAD NO.	COUNTY	FINANCIAL PROJECT ID.

SHEET TITLE: ALUMINUM PEDESTRIAN/BICYCLE BULLET RAILING DETAILS INDEX NO. 820 (DRAWING 1 OF 2)

PROJECT NAME: FORT DESOTO WATER CIRCULATION IMPROVEMENTS

SHEET NO. 10

02/25/03 3:21:08 PM

F:\ARTPROJ\FORT DESOTO\WATER CIRCULATION IMPROVEMENTS\FDOTSTDS\820-1OF2WCI.DGN

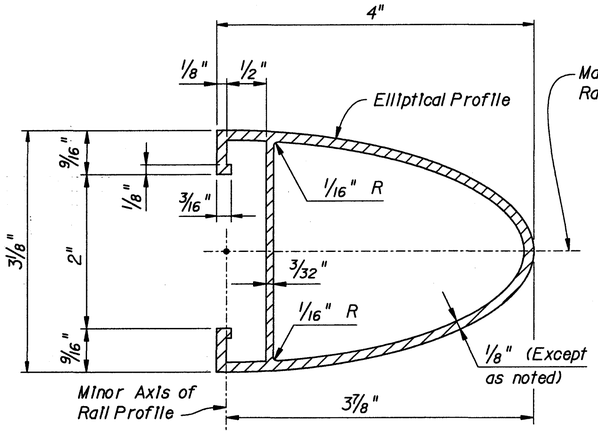

SECTION A-A
(TYPICAL SECTION THRU RAIL)

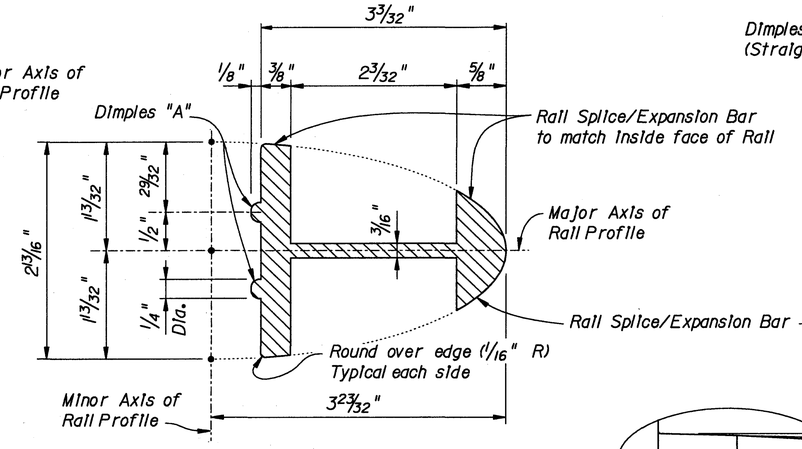

SECTION B-B - RAIL SPLICE/EXPANSION BAR
(RAIL NOT SHOWN FOR CLARITY)

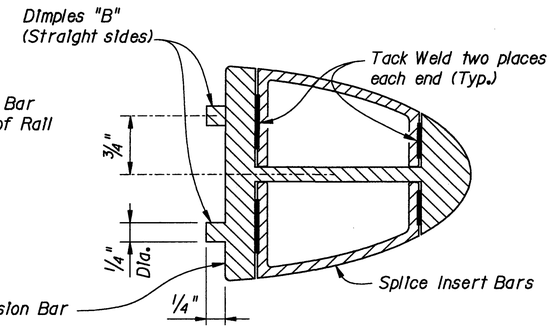

SECTION C-C

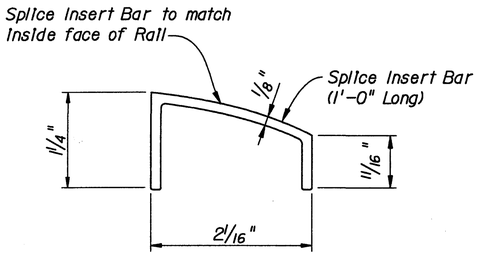

SPLICE INSERT BAR DETAIL

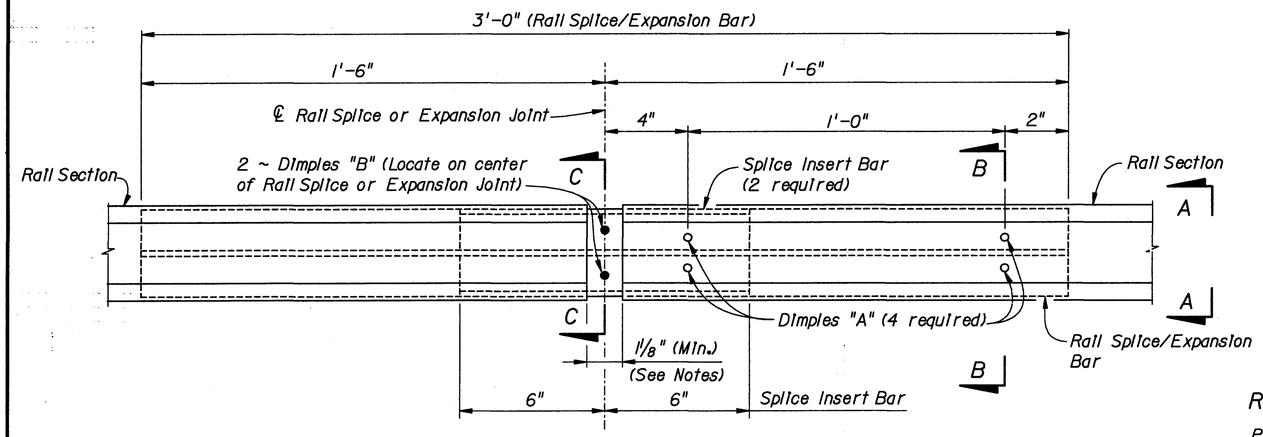

RAIL SPLICE ASSEMBLY DETAIL (TYPICAL AT BRIDGE EXPANSION JOINTS AND RAIL SPLICE LOCATIONS)

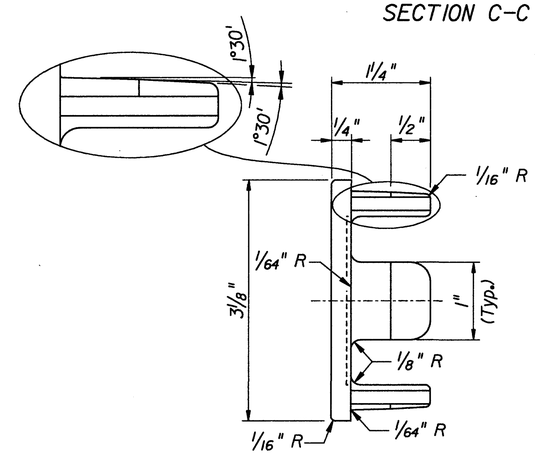

VIEW D-D

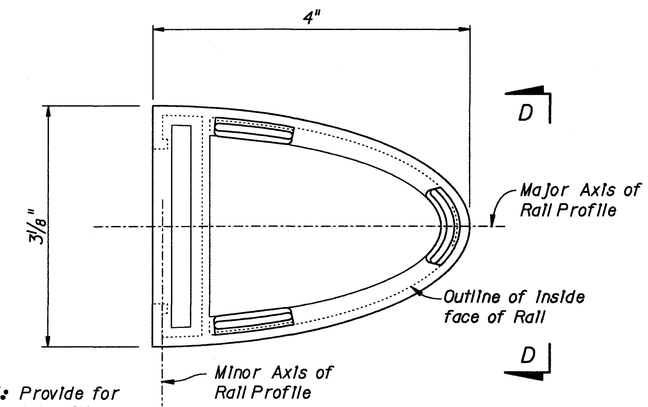

NOTE: Provide for drive fit.

RAIL END CAP DETAIL

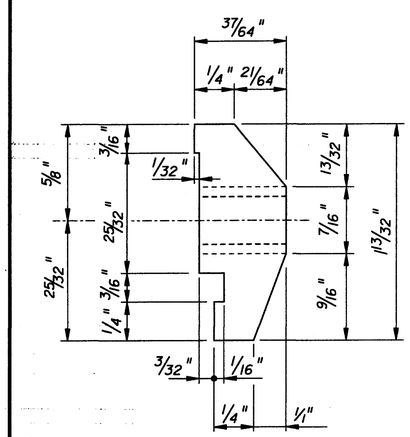

VIEW E-E

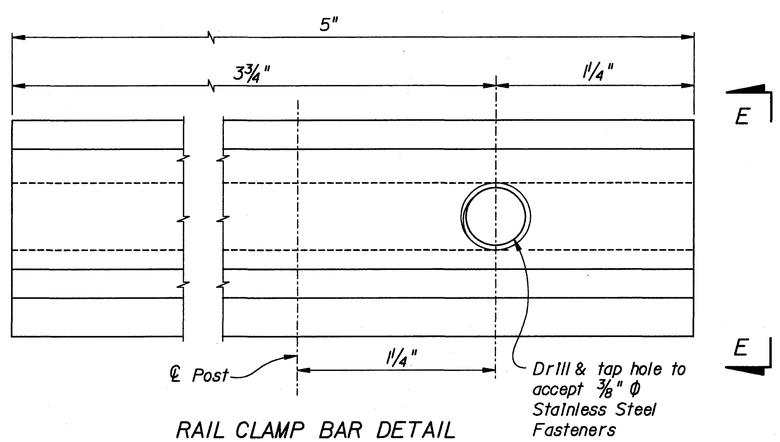

RAIL CLAMP BAR DETAIL

RAILING NOTES:

PAYMENT: Payment for the railing includes Rails, Posts, Rail Splice Assemblies, Rail Clamp Bars, Rail End Caps, Anchor Bolts, Nuts, Resilient Pads, Screws and Washers and all incidental materials and labor required to complete the installation.

POST ASSEMBLY: Fabricated wrought aluminum; Post - ASTM B221, alloy 6061-T6, or alloy 6351-T5; Base Plate - ASTM B209, alloy 6061-T6.

WELDING: Welding of aluminum components shall be in accordance with ANSI and AWS D1.2 "Structures Welding Code - Aluminum".

RAIL AND RAIL SPLICE ASSEMBLIES: Aluminum; ASTM B221, alloy 6061-T6, or alloy 6351-T5.

RAIL CLAMP BAR: Aluminum; ASTM B221, alloy 6061-T6, or alloy 6351-T5.

STAINLESS STEEL FASTENERS: 3/8" Φ Hex Cap Screws and Washers shall be ASTM F-593, alloy group 2 (316).

ANCHOR BOLTS: Anchor bolts shall be in accordance with ASTM A36 or ASTM F1554, Grade 36. Anchor Bolts, Nuts, and Washers shall be hot dip galvanized in accordance with Section 962 of the Specifications.

RAIL END CAP: ASTM B26 sand cast aluminum alloy 356.0-F.

RAIL INSTALLATION: Rail Posts shall be set normal to Profile Grade longitudinally and vertical transversely. Post spacings that land on barrier or parapet obstacles such as armor expansion plates etc. shall be adjusted to clear obstacles by 9" without exceeding maximum post spacing. Posts shall be seated on 1/8" thick resilient pads in accordance with Section 932 of the Specifications. The dimension shall be the same as the post base. Rail expansion joints shall occur in the panel between posts on either side of Bridge Expansion Joint. Rail expansion joints shall be similar to rail splice with provision for movement equal to 1.5 times the bridge joint opening. Care shall be taken to ensure rails are set with the proper openings. Any burrs or sharp edges on rails and posts shall be removed to prevent injury.

RAIL SPLICES: Rails shall be continuous over a minimum of 3 posts. Splices shall be spaced at 40'-0" Centers maximum. Center of splice shall be located a minimum of 1'-5" from the edge of a post. All rails in any railing section shall be spliced about the same center line.

SHOP DRAWINGS: Complete details including rail, post and expansion joint locations and description of material of the proposed railing shall be submitted by the Contractor for the Engineer's approval prior to fabrication.

CROSS REFERENCE: For Post Details see Index No. 820, Drawing 1 of 2.

REVISIONS

DATE	BY	DESCRIPTION	DATE	BY	DESCRIPTION

	NAMES	DATES
DRAWN BY	JLF	5-00
CHECKED BY	SJN	5-00
DESIGNED BY	SJN	5-00
CHECKED BY	MDM	5-00
APPROVED BY	REN	

ENGINEER OF RECORD:
STRUCTURES DESIGN OFFICE
CENTRAL OFFICE
605 Suwannee Street, MS 33
Tallahassee, Florida 32399-0450

FLORIDA DEPARTMENT OF TRANSPORTATION

ROAD NO.	COUNTY	FINANCIAL PROJECT ID.

SHEET TITLE: ALUMINUM PEDESTRIAN/BICYCLE BULLET RAILING DETAILS INDEX NO. 820 (DRAWING 2 OF 2)

PROJECT NAME: FORT DESOTO WATER CIRCULATION IMPROVEMENTS

SHEET NO. 11

02/25/03 3:21:09 PM

F:\BRIDGES\FORT DESOTO\WATER CIRCULATION IMPROVEMENTS\FDOTSTDS\820-2OF2WCI.DGN

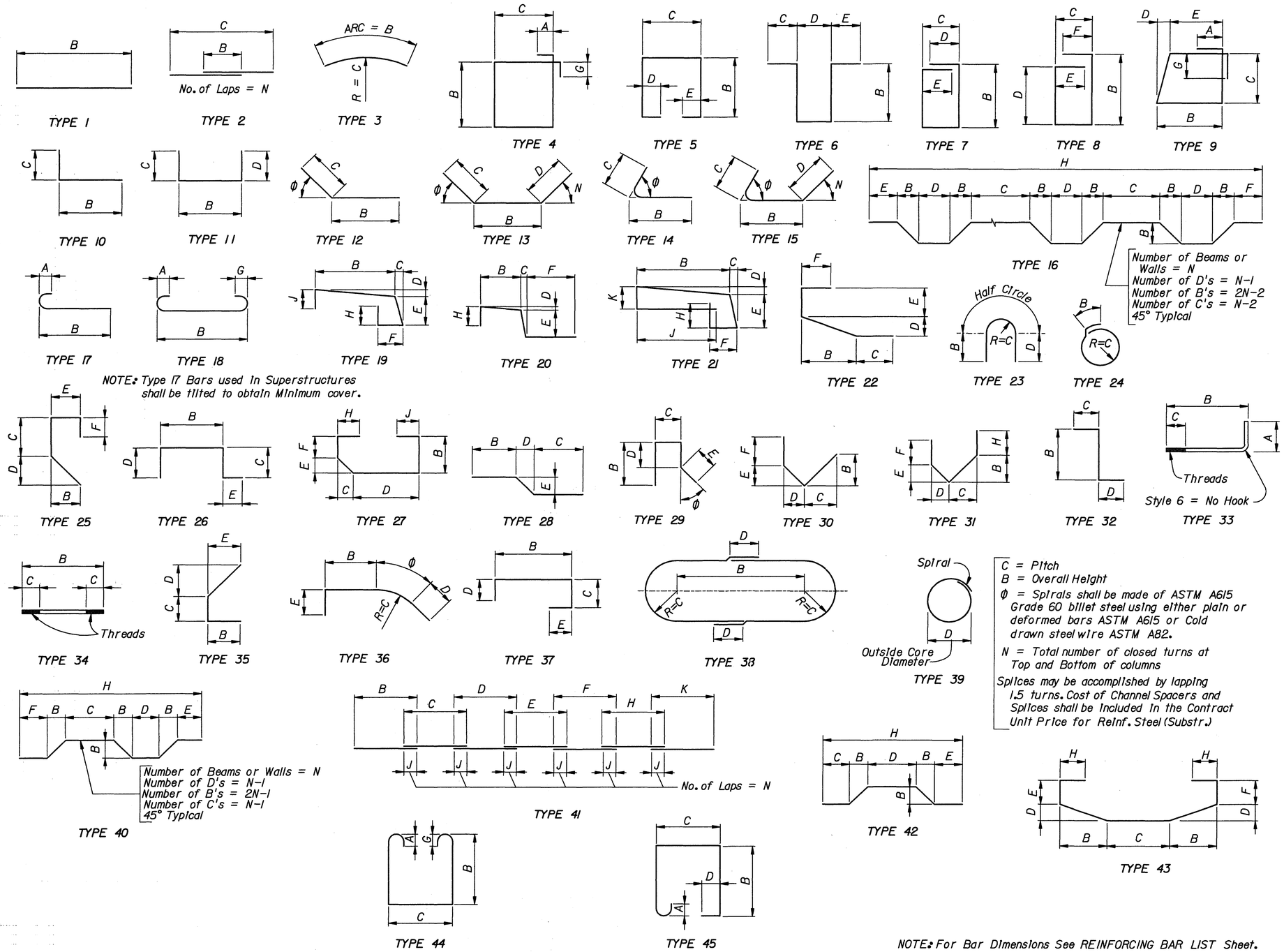

C = Pitch
B = Overall Height
Φ = Spirals shall be made of ASTM A615 Grade 60 billet steel using either plain or deformed bars ASTM A615 or Cold drawn steel wire ASTM A82.
N = Total number of closed turns at Top and Bottom of columns
Splices may be accomplished by lapping 1.5 turns. Cost of Channel Spacers and Splices shall be included In the Contract Unit Price for Reinf. Steel (Substr.)

NOTE: For Bar Dimensions See REINFORCING BAR LIST Sheet.

HOOK DETAILS

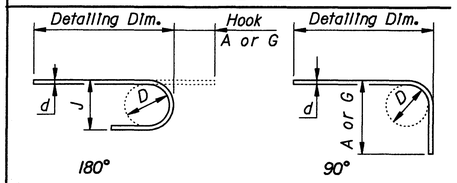

BAR SIZE	D	180° HOOKS		90° HOOKS
		A OR G	J	A OR G
#3	2¼"	5	3	6"
#4	3"	6"	4"	8"
#5	3¾"	7"	5"	10"
#6	4½"	8"	6"	1'-0"
#7	5¼"	10"	7"	1'-2"
#8	6"	11"	8"	1'-4"
#9	9½"	1'-3"	11¾"	1'-7"
#10	10¾"	1'-5"	1'-1¼"	1'-10"
#11	12"	1'-7"	1'-2¾"	2'-0"
#14	18¼"	2'-3"	1'-9¾"	2'-7"
#18	24"	3'-0"	2'-4½"	3'-5"
STYLE		1		3

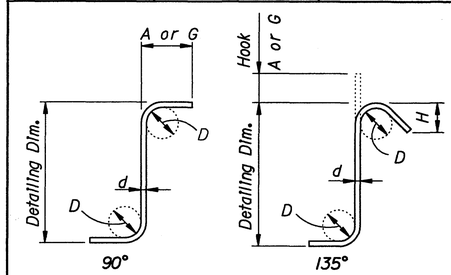

STIRRUPS (TIES SIMILAR)

RECOMMENDED STIRRUP & TIE HOOK DIMENSIONS

BAR SIZE	D	90° HOOKS	135° HOOKS	
		A or G	A or G	H *
#3	1½"	4"	4"	2½"
#4	2"	4½"	4½"	3"
#5	2½"	6"	5½"	3¾"
#6	4½"	1'-0"	8"	4½"
#7	5¼"	1'-2"	9"	5¼"
#8	6"	1'-4"	10½"	6"
STYLE		4	5	

STYLE 6 = NO HOOK

* Dimension Is approximate.

Hook Styles Detailed on this sheet are for Illustration Only.

Actual Hook Style for any particular bar will be shown under A or G Heading on REINFORCING BAR LIST sheet.

All dimensions are In millimeters (mm), except as noted.

All Dimensions are out-to-out.

REVISIONS	BY	DATE

SURVEY BOOK No.:		
SURVEY DIVISION	BY	DATE
SURVEYED	---	---
TECHNICIAN	---	---
CHECKED	---	---
DESIGN DIVISION		
DESIGNED	WCM	7/01
DRAWN	JBH	7/01
CHECKED	WCM	7/01

PINELLAS COUNTY, FLORIDA
Public Works

LAND SURVEY DIVISION
22211 U.S. HWY. 19 NORTH
CLEARWATER, FLORIDA 33765-2347
PHONE (727) 464-8904

ENGINEERING DEPARTMENT
440 COURT STREET
CLEARWATER, FLORIDA 33756-5136
PHONE (727) 464-3251

MURRAY C. McDONOUGH FLORIDA REGISTERED PROFESSIONAL ENGINEER No. 43353

2/28/03
DATE

FORT DESOTO
WATER CIRCULATION IMPROVEMENTS

STANDARD BAR BENDING DETAILS
INDEX NO. 1300

DATE: FEBRUARY, 2003
PROJECT ID NO.: 921573
SURVEY FILE NO.: N/A
SHEET 12 OF 42
FILE: ...\1300WC1.DG
VIEW: PLOT

e:\bridges\fort desoto\water circulation improvements\fdotstds\1300wc1.dg

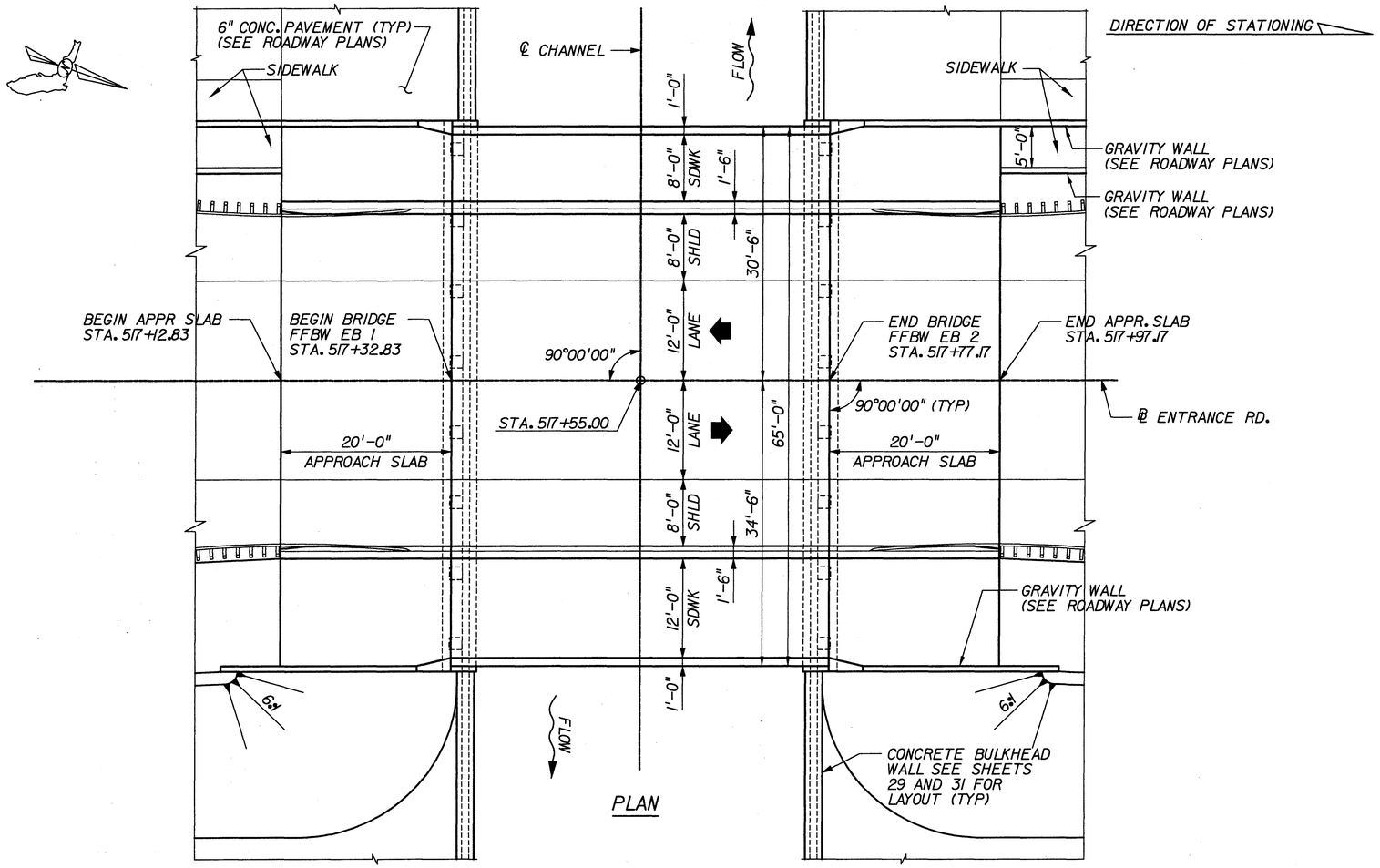

PLAN

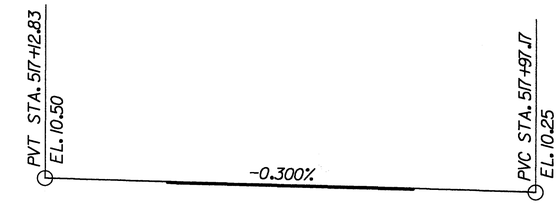

VERTICAL ALIGNMENT ALONG ℄ ENTRANCE ROAD

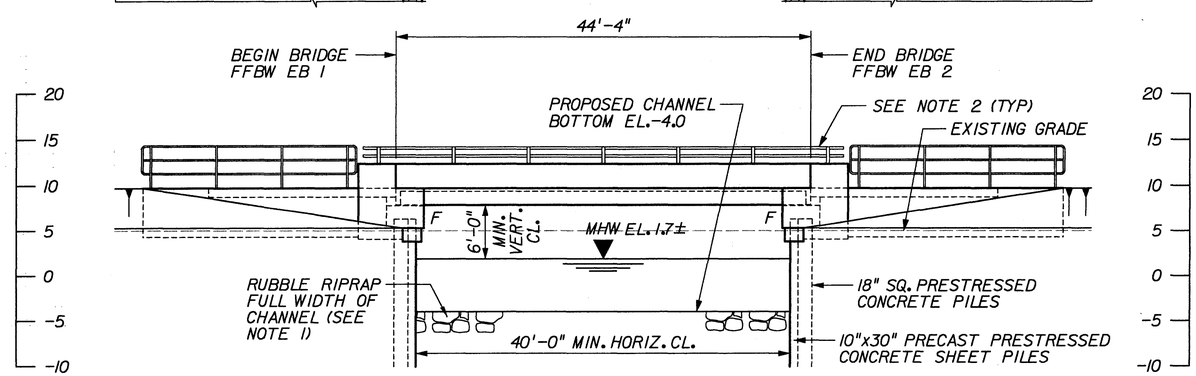

ELEVATION

NOTES:

1. SEE ROADWAY PLANS FOR LIMITS OF RUBBLE RIPRAP.
2. PROVIDE 14° KINK IN BULLET RAIL TO MATCH WING POST FACE. KINK SHALL BE SHOP FABRICATED.
3. FOR LOCATION OF EXISTING UTILITIES, SEE ROADWAY PLANS.

REVISIONS	BY	DATE

SURVEY BOOK No.:		
SURVEY DIVISION	BY	DATE
SURVEYED	---	---
TECHNICIAN	---	---
CHECKED	---	---
DESIGN DIVISION		
DESIGNED	MCM	1/00
DRAWN	DCW	1/00
CHECKED	MCM	1/00

PINELLAS COUNTY, FLORIDA
Public Works

URS CORPORATION SOUTHERN
7650 WEST COURTNEY
CAMPBELL CAUSEWAY
TAMPA, FLORIDA 33607-1462
NO. 00000002

MURRAY C. McDONOUGH FLORIDA REGISTERED PROFESSIONAL ENGINEER No. 43353

2/29/03
DATE

FORT DESOTO
WATER CIRCULATION
IMPROVEMENTS

PLAN AND ELEVATION
ENTRANCE ROAD BRIDGE

DATE: FEBRUARY, 2003
PROJECT ID NO.: 921573
SURVEY FILE NO.: N/A
SHEET 13 OF 41
FILE:...\BGPEB101.D
VIEW: PLOT

e:\bridges\fort desoto\water circulation improvements\entrance road\bgpeb101.dg

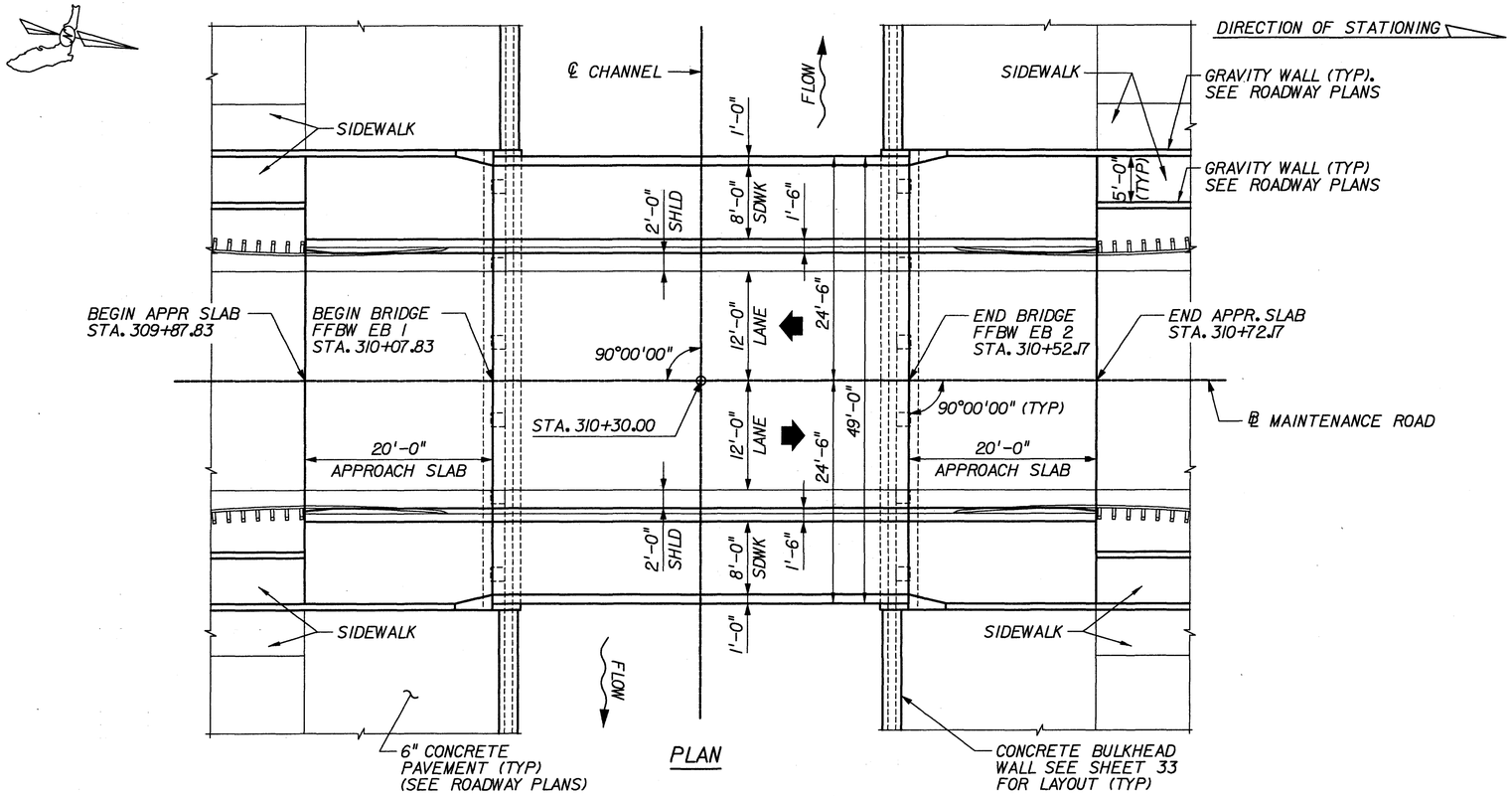

PLAN

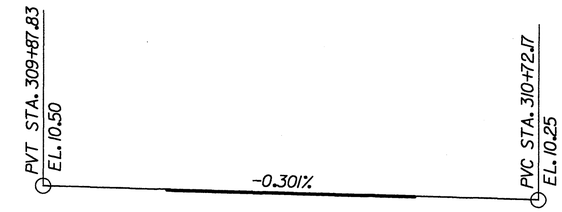

VERTICAL ALIGNMENT ALONG ℄ MAINTENANCE ROAD

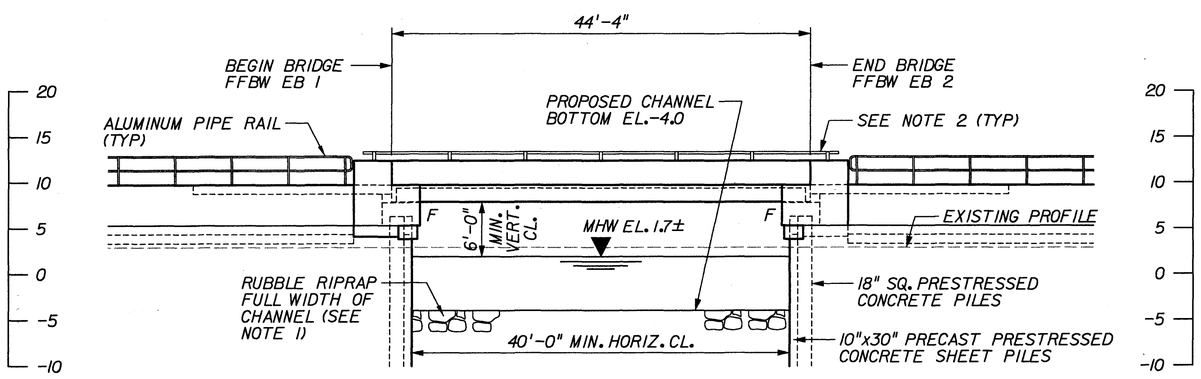

ELEVATION

NOTES:

1. SEE ROADWAY PLANS FOR LIMITS OF RUBBLE RIPRAP.
2. PROVIDE 14° KINK IN BULLET RAIL TO MATCH WING POST FACE. KINK SHALL BE SHOP FABRICATED.
3. FOR LOCATION OF EXISTING UTILITIES, SEE ROADWAY PLANS.

REVISIONS	BY	DATE

SURVEY BOOK No.:

SURVEY DIVISION	BY	DATE
SURVEYED	---	---
TECHNICIAN	---	---
CHECKED	---	---
DESIGN DIVISION		
DESIGNED	MCM	1/00
DRAWN	DCW	1/00
CHECKED	MCM	1/00

PINELLAS COUNTY, FLORIDA
Public Works

URS CORPORATION SOUTHERN
7650 WEST COURTNEY CAMPBELL CAUSEWAY
TAMPA, FLORIDA 33607-1462
NO. 00000002

MURRAY C. McDONOUGH FLORIDA REGISTERED PROFESSIONAL ENGINEER No. 43353

2/25/03
DATE

FORT DESOTO
WATER CIRCULATION IMPROVEMENTS

PLAN AND ELEVATION
MAINTENANCE ROAD BRIDGE

DATE: FEBRUARY, 2003
PROJECT ID NO.: 921573
SURVEY FILE NO.: N/A
SHEET 14 OF 41
FILE: ...\BGPEB201.D
VIEW: PLOT

e:\bridges\fort desoto\water circulation improvements\maintenance road\bgpeb201.dg

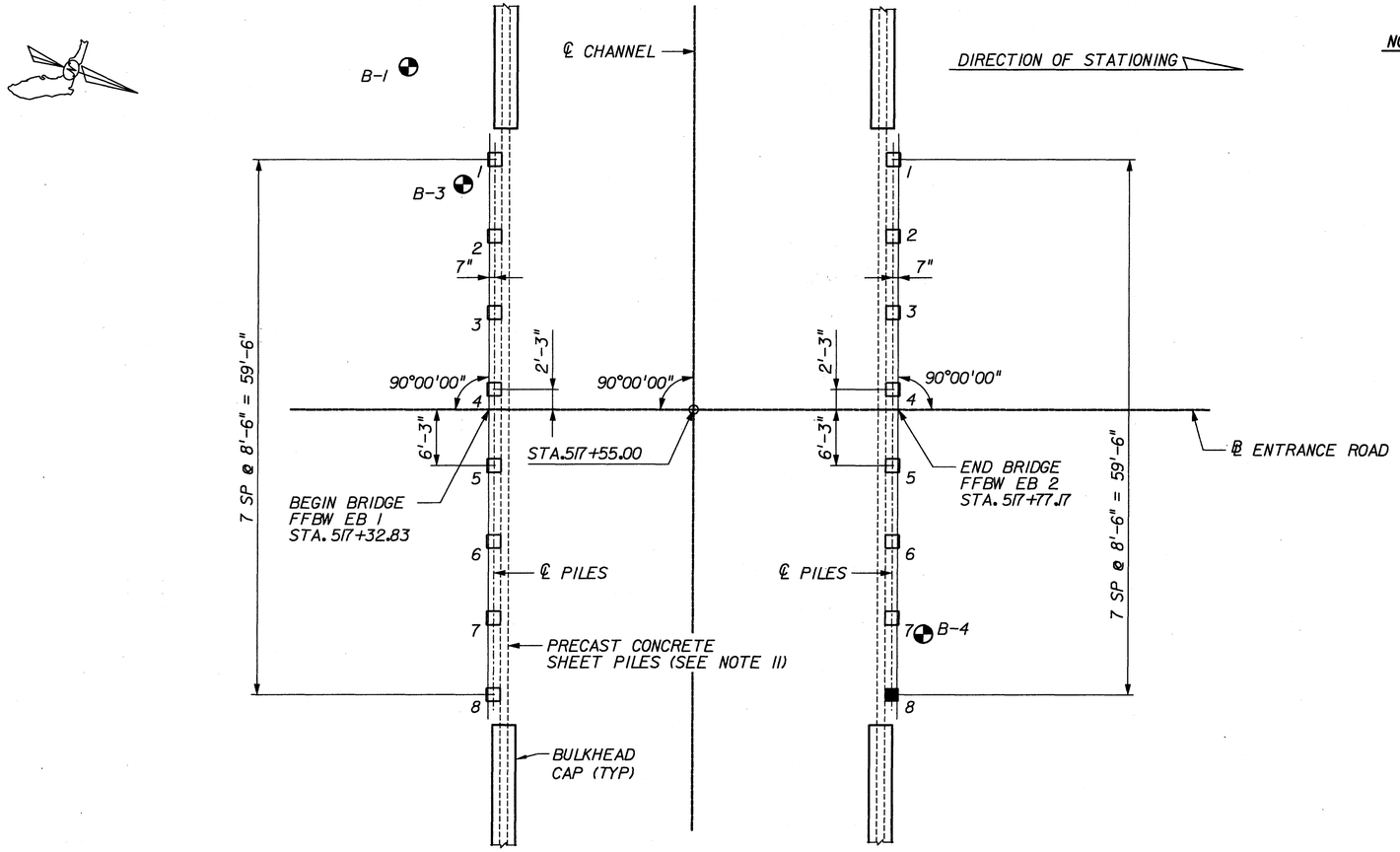

FOUNDATION LAYOUT

NOTES:

1. ALL PILES TO BE 18" SQUARE PRESTRESSED CONCRETE.
2. PILES SHALL BE INSTALLED IN ACCORDANCE WITH SECTION 455 OF THE SPECIFICATIONS.
3. LEGEND:
   - ☐ DENOTES PLUMB PILE
   - ■ DENOTES TEST PILE
   - ⊕ DENOTES APPROXIMATE LOCATION OF SPT BORING (SEE NOTE 8)
4. PILE SPACING SHOWN IS ALONG FFBW AT BOTTOM OF END BENT CAP.
5. DRIVE ONE 18" SQUARE PRESTRESSED CONCRETE TEST PILE IN THE POSITION OF A PERMANENT PLUMB PILE AT END BENT 2, PILE NO. 8 OR AS DIRECTED BY THE ENGINEER. A DYNAMIC LOAD TEST SHALL BE PERFORMED ON ALL TEST PILES AS PER SECTION 455-5.13 OF THE SPECIFICATIONS. DYNAMIC LOAD TEST SHALL BE INCLUDED IN THE CONTRACT UNIT PRICE FOR BID ITEM 455-137 (DYNAMIC TEST LOAD)
6. THE BEARING CAPACITY OF THE PILES WILL BE DETERMINED FROM DYNAMIC TESTING OF THE TEST PILE. THE ENGINEER AT HIS OPTION MAY CHOOSE TO DYNAMICALLY MONITOR THE INSTALLATION OF PRODUCTION PILES.
7. FOR PILE CUT-OFF ELEVATIONS, SEE SHEETS 17 AND 18.

PILE DATA TABLE

INSTALLATION CRITERIA							
LOCATION	PILE SIZE (IN)	ULTIMATE BEARING CAPACITY (TONS)	TENSION CAPACITY (TONS)	MIN. TIP ELEV. (FT)*	TEST PILE LENGTH (FT)	REQ'D JET ELEV. (FT)	REQ'D PREFORM ELEV. (FT)
END BENT 1	18	166	N/A	-35	-	N/A	N/A
END BENT 2	18	166	N/A	-35	95	N/A	N/A

DESIGN CRITERIA							
LOCATION	FACTORED DESIGN LOAD (TONS)	DOWN DRAG (TONS)	TOTAL SCOUR RESIST. (TONS)	NET SCOUR RESIST. (TONS)	LONG TERM SCOUR ELEV. (FT)	100 YR. SCOUR ELEV. (FT)**	Φ
END BENT 1	84	14	18	18	N/A	-8.0	0.70
END BENT 2	84	14	18	18	N/A	-8.0	0.70

* MINIMUM TIP ELEVATION IS REQUIRED FOR LATERAL CAPACITY.
** 100 YEAR SCOUR ELEVATION ASSUMED TO BE 4 FEET BELOW CHANNEL BOTTOM EL.-4.0.

$$\text{ULTIMATE BEARING CAPACITY} = \frac{\text{FACTORED DESIGN LOAD} + \text{NET SCOUR} + \text{DOWNDRAG}}{\Phi}$$

THE REQUIRED DRIVING RESISTANCE (RDR) EQUALS THE ULTIMATE BEARING CAPACITY.
Φ IS BASED ON THE USE OF DYNAMIC LOAD TEST.

8. GEOTECHNICAL EXPLORATION WAS PERFORMED BY WILLIAMS EARTH SCIENCES, INC. (WES) ON 3/99 AND 7/00. REFER TO GEOTECHNICAL REPORT BY WES DATED AUGUST 7, 2000 FOR DETAILED BORING INFORMATION.
9. JETTING OF PILES IS NOT PERMITTED.
10. TEST PILE LENGTH IS BASED ON LENGTH OF PILE FROM PILE CUT-OFF ELEVATION TO TEST PILE TIP ELEVATION.
11. PRECAST CONCRETE SHEET PILES FOR BULKHEAD WALL SHALL BE INSTALLED IN THEIR FINAL POSITION PRIOR TO INSTALLATION OF PILES. SEE SHEETS 29 THRU 39 FOR BULKHEAD WALL.
12. PILES SHALL BE PREFORMED FROM EXISTING GRADE TO TIP OF PRECAST CONCRETE SHEET PILES IN ACCORDANCE WITH SECTION 455-5.1.1 OF THE SPECIFICATIONS. NO SEPERATE PAYMENT WILL BE MADE FOR PREFORMING. THE COST OF ALL PREFORMING WORK SHALL BE INCLUDED THE BID PRICE FOR DRIVEN PILES PER LINEAR FOOT.

REVISIONS	BY	DATE
⚠ XXXXXXXXX	---	---

SURVEY BOOK No.:		
SURVEY DIVISION	BY	DATE
SURVEYED	---	---
TECHNICIAN	---	---
CHECKED	---	---
DESIGN DIVISION		
DESIGNED	MCM	1/00
DRAWN	DCW	1/00
CHECKED	MCM	1/00

PINELLAS COUNTY, FLORIDA
Public Works

URS CORPORATION SOUTHERN
7650 WEST COURTNEY CAMPBELL CAUSEWAY
TAMPA, FLORIDA 33607-1462
NO. 00000002

MURRAY C. McDONOUGH FLORIDA REGISTERED PROFESSIONAL ENGINEER No. 43353 — DATE

FORT DESOTO
WATER CIRCULATION IMPROVEMENTS

FOUNDATION LAYOUT
ENTRANCE ROAD BRIDGE

DATE: FEBRUARY, 2003
PROJECT ID NO.: 921573
SURVEY FILE NO.: N/A
SHEET 15 OF 41
FILE: ...\BFNDB101.D
VIEW: PLOT

e:\bridges\fort desoto\water circulation improvements\entrance road\bfndb101.dg

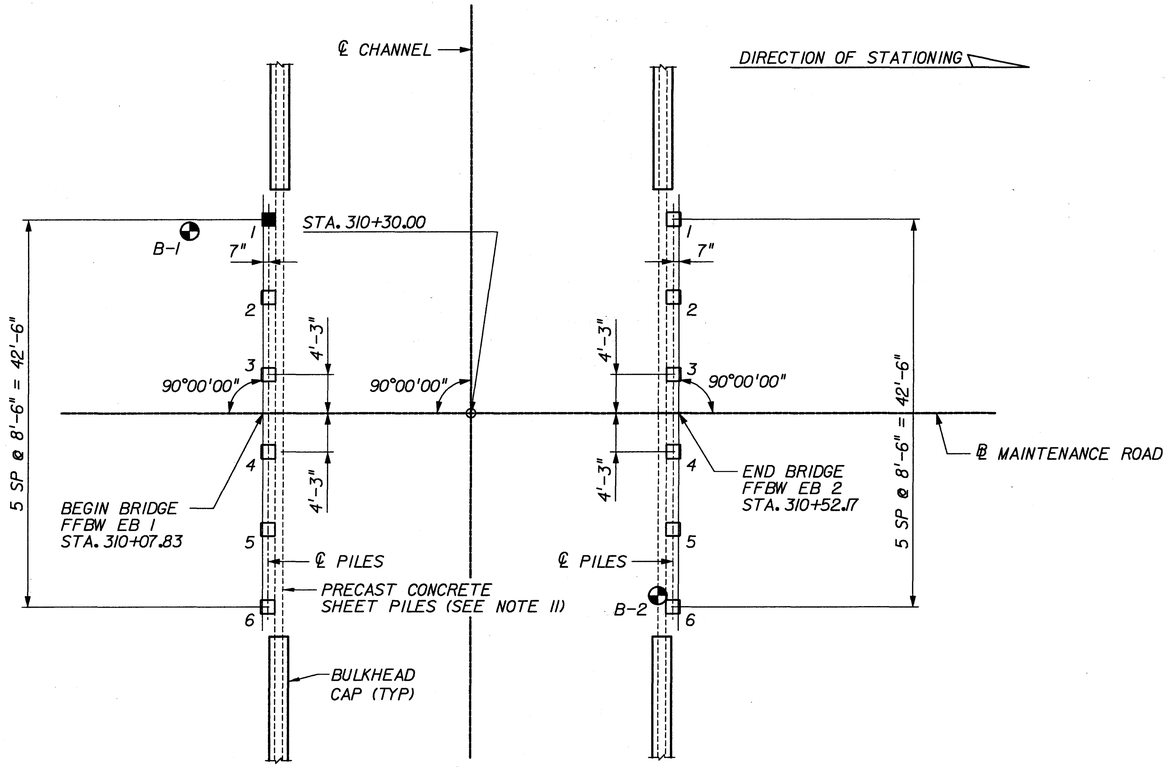

FOUNDATION LAYOUT

NOTES:

1. ALL PILES TO BE 18" SQUARE PRESTRESSED CONCRETE.
2. PILES SHALL BE INSTALLED IN ACCORDANCE WITH SECTION 455 OF THE SPECIFICATIONS.
3. LEGEND:
   - ☐ DENOTES PLUMB PILE
   - ■ DENOTES TEST PILE
   - ⊕ DENOTES APPROXIMATE LOCATION OF SPT BORING (SEE NOTE 8)
4. PILE SPACING SHOWN IS ALONG FFBW AT BOTTOM OF END BENT CAP.
5. DRIVE ONE 18" SQUARE PRESTRESSED CONCRETE TEST PILE IN THE POSITION OF A PERMANENT PLUMB PILE AT END BENT 1, PILE NO. 1 OR AS DIRECTED BY THE ENGINEER. A DYNAMIC LOAD TEST SHALL BE PERFORMED ON ALL TEST PILES AS PER SECTION 455-5.13 OF THE SPECIFICATIONS. DYNAMIC LOAD TEST SHALL BE INCLUDED IN THE CONTRACT UNIT PRICE FOR BID ITEM 455-137 (DYNAMIC TEST LOAD)
6. THE BEARING CAPACITY OF THE PILES WILL BE DETERMINED FROM DYNAMIC TESTING OF THE TEST PILE. THE ENGINEER AT HIS OPTION MAY CHOOSE TO DYNAMICALLY MONITOR THE INSTALLATION OF PRODUCTION PILES.
7. FOR PILE CUT-OFF ELEVATIONS, SEE SHEET 19.

PILE DATA TABLE

INSTALLATION CRITERIA

LOCATION	PILE SIZE (IN)	ULTIMATE BEARING CAPACITY (TONS)	TENSION CAPACITY (TONS)	MIN. TIP ELEV. (FT)*	TEST PILE LENGTH (FT)	REQ'D JET ELEV. (FT)	REQ'D PREFORM ELEV. (FT)
END BENT 1	18	161	N/A	-35	-	N/A	N/A
END BENT 2	18	161	N/A	-35	85	N/A	N/A

DESIGN CRITERIA

LOCATION	FACTORED DESIGN LOAD (TONS)	DOWN DRAG (TONS)	TOTAL SCOUR RESIST. (TONS)	NET SCOUR RESIST. (TONS)	LONG TERM SCOUR ELEV. (FT)	100 YR. SCOUR ELEV. (FT)**	Φ
END BENT 1	84	15	14	14	N/A	-8.0	0.70
END BENT 2	84	15	14	14	N/A	-8.0	0.70

* MINIMUM TIP ELEVATION IS REQUIRED FOR LATERAL CAPACITY.
** 100 YEAR SCOUR ELEVATION ASSUMED TO BE 4 FEET BELOW CHANNEL BOTTOM EL.-4.0.

$$\text{ULTIMATE BEARING CAPACITY} = \frac{\text{FACTORED DESIGN LOAD} + \text{NET SCOUR} + \text{DOWNDRAG}}{\Phi}$$

THE REQUIRED DRIVING RESISTANCE (RDR) EQUALS THE ULTIMATE BEARING CAPACITY.
Φ IS BASED ON THE USE OF DYNAMIC LOAD TEST.

8. GEOTECHNICAL EXPLORATION WAS PERFORMED BY WILLIAMS EARTH SCIENCES, INC. (WES) ON 3/99 AND 7/00. REFER TO GEOTECHNICAL REPORT BY WES DATED AUGUST 7, 2000 FOR DETAILED BORING INFORMATION.
9. JETTING OF PILES IS NOT PERMITTED.
10. TEST PILE LENGTH IS BASED ON LENGTH OF PILE FROM PILE CUT-OFF ELEVATION TO TEST PILE TIP ELEVATION.
11. PRECAST CONCRETE SHEET PILES FOR BULKHEAD WALL SHALL BE INSTALLED IN THEIR FINAL POSITION PRIOR TO INSTALLATION OF PILES. SEE SHEETS 29 THRU 39 FOR BULKHEAD WALL.
12. PILES SHALL BE PREFORMED FROM EXISTING GRADE TO TIP OF PRECAST CONCRETE SHEET PILES IN ACCORDANCE WITH SECTION 455-5.1.1 OF THE SPECIFICATIONS. NO SEPERATE PAYMENT WILL BE MADE FOR PREFORMING. THE COST OF ALL PREFORMING WORK SHALL BE INCLUDED THE BID PRICE FOR DRIVEN PILES PER LINEAR FOOT.

REVISIONS	BY	DATE
1 XXXXXXXXX	---	---

SURVEY BOOK No.:		
SURVEY DIVISION	BY	DATE
SURVEYED	---	---
TECHNICIAN	---	---
CHECKED	---	---
DESIGN DIVISION		
DESIGNED	MCM	1/00
DRAWN	DCW	1/00
CHECKED	MCM	1/00

PINELLAS COUNTY, FLORIDA
Public Works

URS CORPORATION SOUTHERN
7650 WEST COURTNEY
CAMPBELL CAUSEWAY
TAMPA, FLORIDA 33607-1462
NO. 00000002

MURRAY C. McDONOUGH FLORIDA REGISTERED PROFESSIONAL ENGINEER No. 43353

2/28/03
DATE

FORT DESOTO
WATER CIRCULATION
IMPROVEMENTS

FOUNDATION LAYOUT
MAINTENANCE ROAD BRIDGE

DATE: FEBRUARY, 2003
PROJECT ID NO.: 921573
SURVEY FILE NO.: N/A
SHEET 16 OF 41
FILE:...\BFNDB201.D
VIEW: PLOT

e:\bridges\fort desoto\water circulation improvements\maintenance road\bfndb201.dg

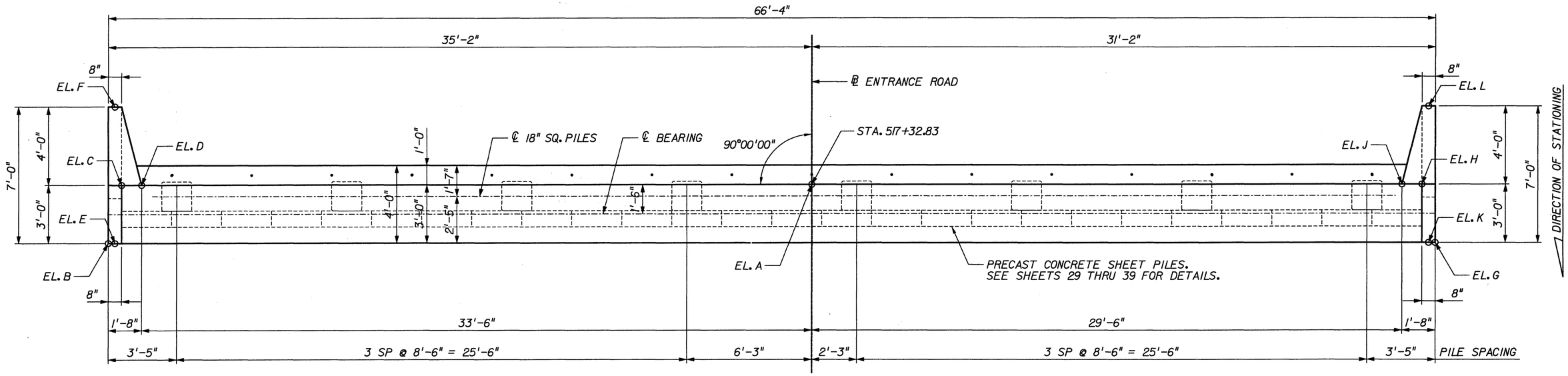

PLAN

PILE CUTOFF ELEVATIONS								
PILE NO.	1	2	3	4	5	6	7	8
ELEVATION	6.485	6.655	6.825	6.995	6.915	6.745	6.575	6.405

TABLE OF ELEVATIONS											
POINT NO.	A	B	C	D	E	F	G	H	J	K	L
ELEVATION	6.040	5.336	7.854	8.770	9.417	12.437	5.416	7.934	8.850	9.497	12.517

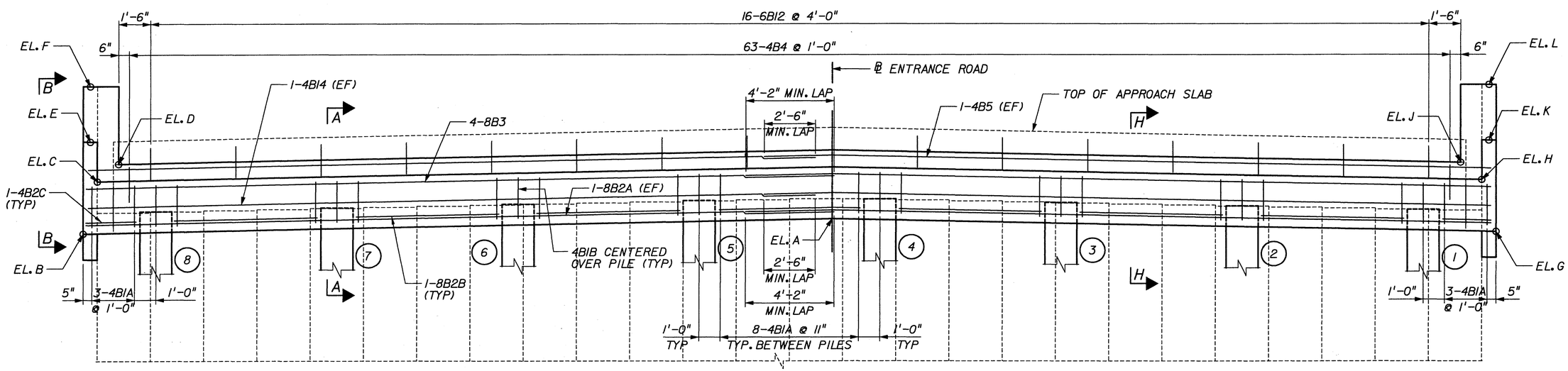

ELEVATION

REVISIONS	BY	DATE

SURVEY BOOK No.:		
SURVEY DIVISION	BY	DATE
SURVEYED	---	---
TECHNICIAN	---	---
CHECKED	---	---
DESIGN DIVISION		
DESIGNED	MT	1/00
DRAWN	DCW	1/00
CHECKED	MCM	1/00

PINELLAS COUNTY, FLORIDA
Public Works

URS CORPORATION SOUTHERN
7650 WEST COURTNEY CAMPBELL CAUSEWAY
TAMPA, FLORIDA 33607-1462
NO. 00000002

MURRAY C. McDONOUGH FLORIDA REGISTERED PROFESSIONAL ENGINEER No. 43353 — DATE 2/28/03

FORT DESOTO
WATER CIRCULATION IMPROVEMENTS

END BENT 1 PLAN AND ELEVATION
ENTRANCE ROAD BRIDGE

DATE: FEBRUARY, 2003
PROJECT ID NO.: 921573
SURVEY FILE NO.: N/A
SHEET 17 OF 41
FILE: ...\BABTB101.D
VIEW: PLOT

e:\bridges\fort desoto\water circulation improvements\entrance road\babtb101.dg

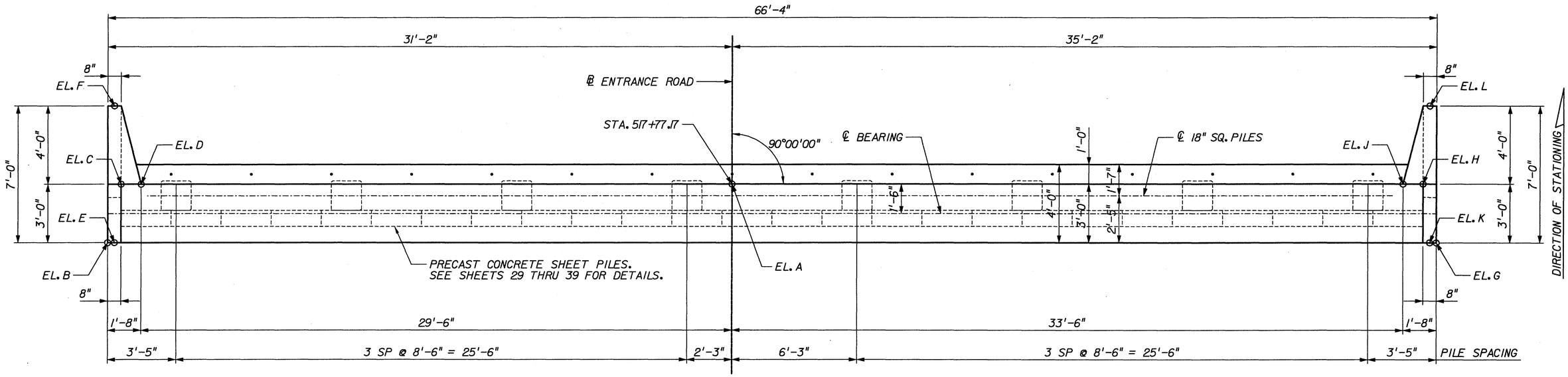

PLAN

PILE CUTOFF ELEVATIONS								
PILE NO.	1	2	3	4	5	6	7	8
ELEVATION	6.361	6.531	6.701	6.871	6.791	6.621	6.451	6.281

TABLE OF ELEVATIONS											
POINT NO.	A	B	C	D	E	F	G	H	J	K	L
ELEVATION	5.916	5.292	7.800	8.716	9.363	12.383	5.212	7.721	8.636	9.284	12.303

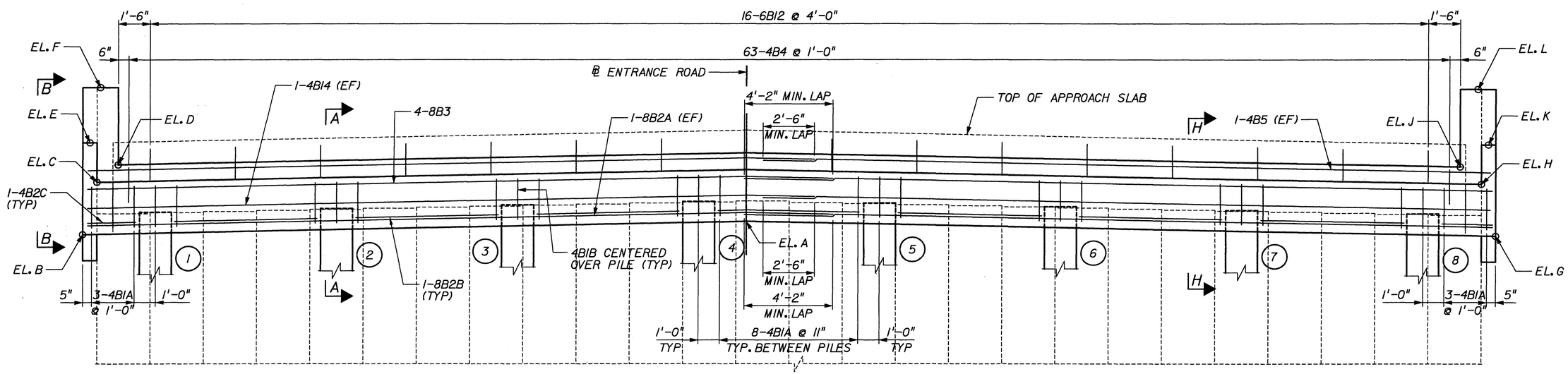

ELEVATION

REVISIONS	BY	DATE

SURVEY BOOK No.:		
SURVEY DIVISION	BY	DATE
SURVEYED	---	---
TECHNICIAN	---	---
CHECKED	---	---
DESIGN DIVISION		
DESIGNED	MT	1/00
DRAWN	DCW	1/00
CHECKED	MCM	1/00

PINELLAS COUNTY, FLORIDA
Public Works

URS CORPORATION SOUTHERN
7650 WEST COURTNEY
CAMPBELL CAUSEWAY
TAMPA, FLORIDA 33607-1462
NO. 00000002

MURRAY C. McDONOUGH FLORIDA REGISTERED PROFESSIONAL ENGINEER No. 43353

DATE

FORT DESOTO
WATER CIRCULATION
IMPROVEMENTS

END BENT 2 PLAN AND ELEVATION
ENTRANCE ROAD BRIDGE

DATE: FEBRUARY, 2003
PROJECT ID NO.: 921573
SURVEY FILE NO.: N/A
SHEET 18 OF 41
FILE: ...\BABTB102.D
VIEW: PLOT

e:\bridges\fort desoto\water circulation improvements\entrance road\babtb102.dg

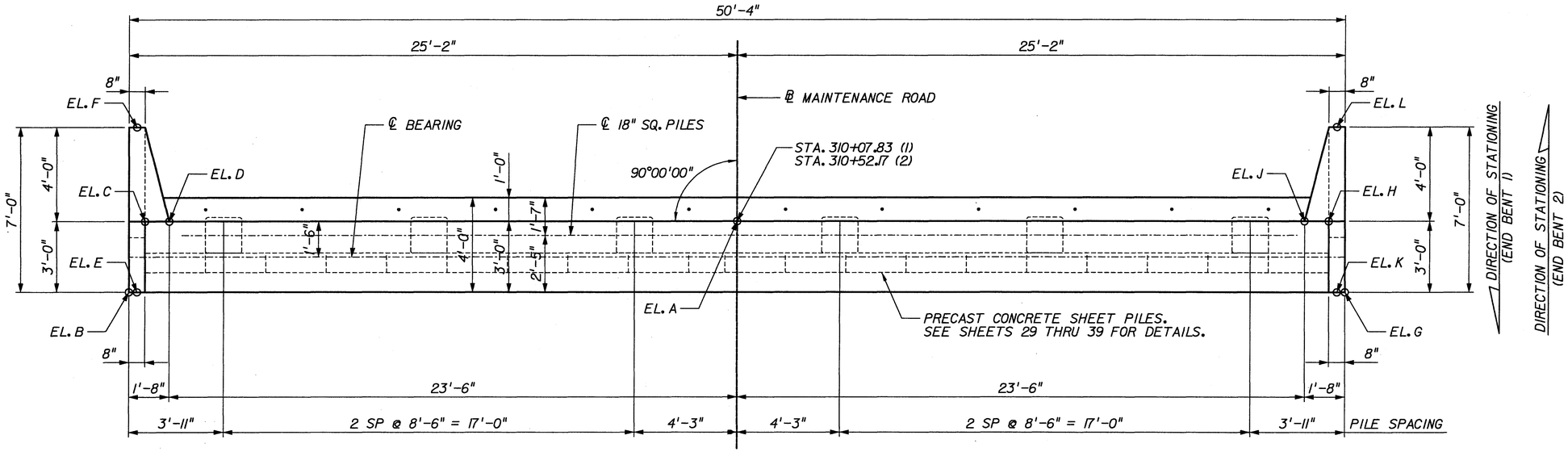

PLAN

PILE CUTOFF ELEVATIONS						
PILE NO.	1	2	3	4	5	6
ELEVATION (1)	6.615	6.785	6.955	6.955	6.785	6.615
ELEVATION (2)	6.491	6.661	6.831	6.831	6.661	6.491

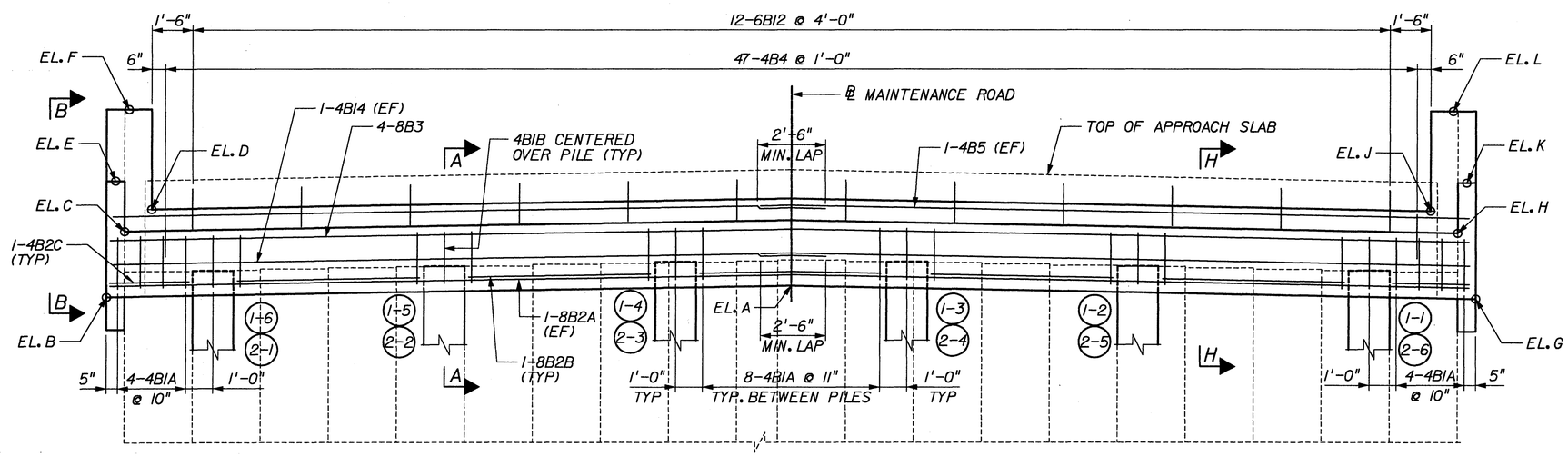

ELEVATION

TABLE OF ELEVATIONS			
END BENT 1		END BENT 2	
POINT	ELEVATION	POINT	ELEVATION
A	6.040	A	5.916
B	5.536	B	5.412
C	8.050	C	7.926
D	8.966	D	8.842
E	9.613	E	9.489
F	12.606	F	12.482
G	5.536	G	5.412
H	8.050	H	7.926
J	8.966	J	8.842
K	9.613	K	9.489
L	12.606	L	12.482

REVISIONS	BY	DATE

SURVEY BOOK No.:		
SURVEY DIVISION	BY	DATE
SURVEYED	---	---
TECHNICIAN	---	---
CHECKED	---	---
DESIGN DIVISION		
DESIGNED	MT	1/00
DRAWN	DCW	1/00
CHECKED	MCM	2/00

PINELLAS COUNTY, FLORIDA
Public Works

URS CORPORATION SOUTHERN
7650 WEST COURTNEY
CAMPBELL CAUSEWAY
TAMPA, FLORIDA 33607-1462
NO. 00000002

MURRAY C. McDONOUGH FLORIDA REGISTERED PROFESSIONAL ENGINEER No. 43353

2/28/03
DATE

FORT DESOTO
WATER CIRCULATION
IMPROVEMENTS

END BENT 1 & 2 PLAN AND ELEVATION
MAINTENANCE ROAD BRIDGE

DATE: FEBRUARY, 2003
PROJECT ID NO.: 921573
SURVEY FILE NO.: N/A
SHEET 19 OF 41
FILE:...\BABTB201.D
VIEW: PLOT

e:\bridges\fort desoto\water circulation improvements\maintenance road\babtb201.dg

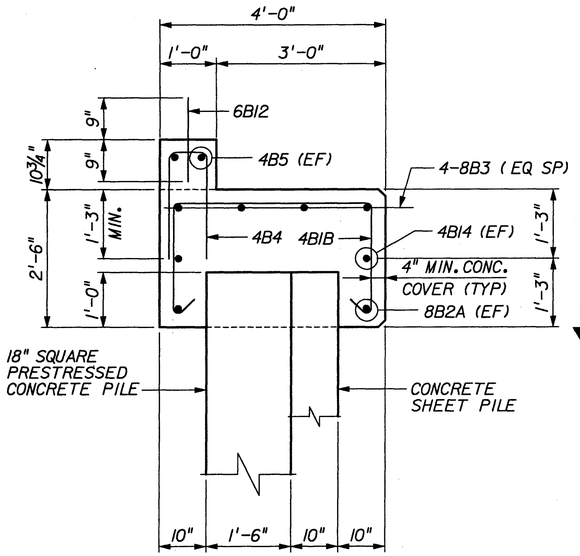

SECTION A-A

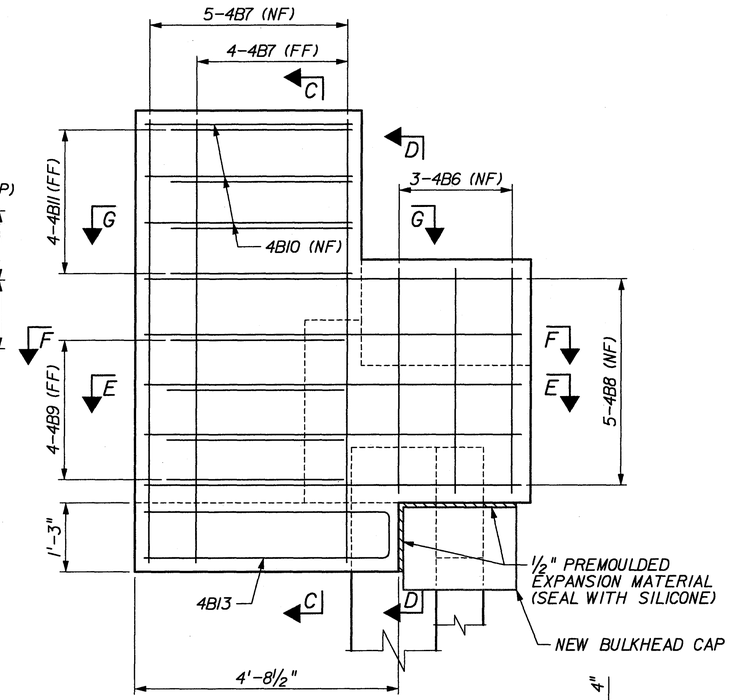

ELEVATION B-B

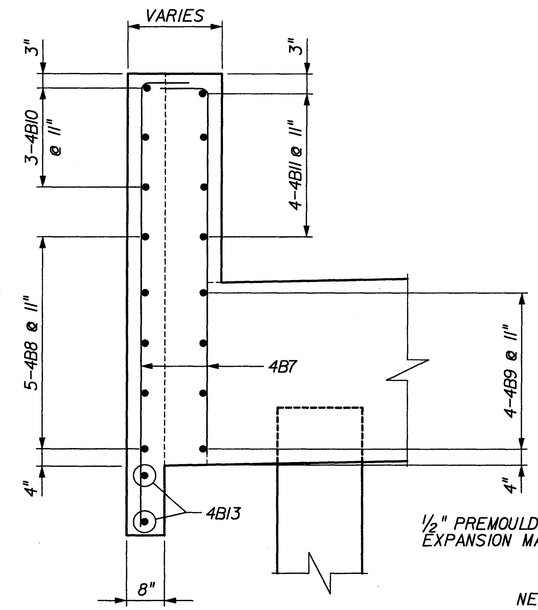

SECTION C-C

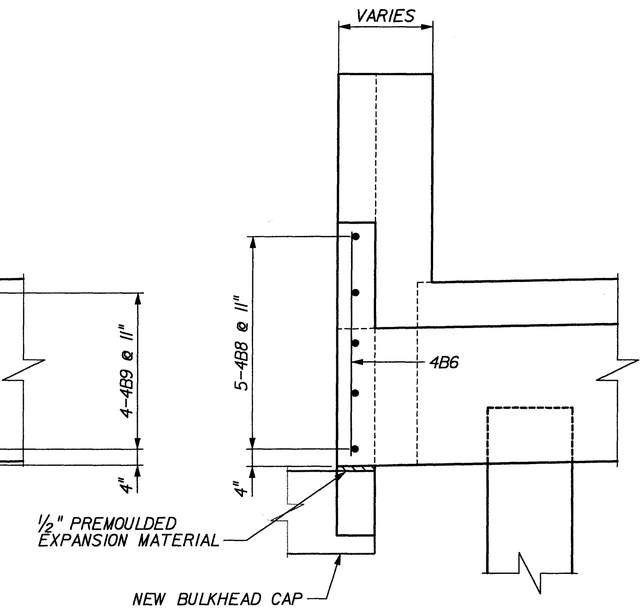

SECTION D-D

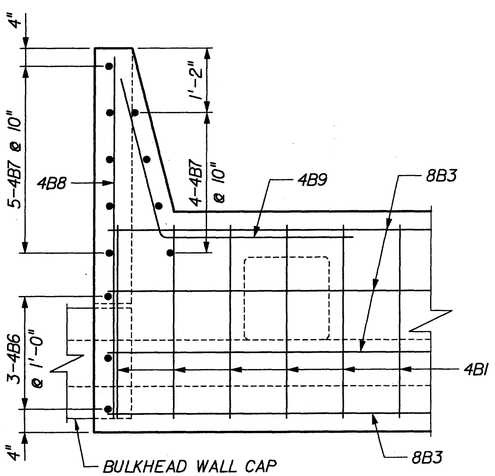

SECTION E-E

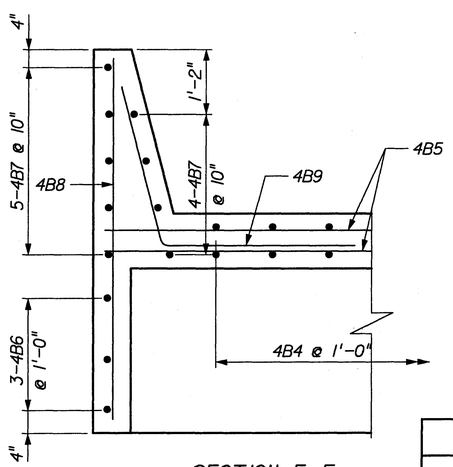

SECTION F-F

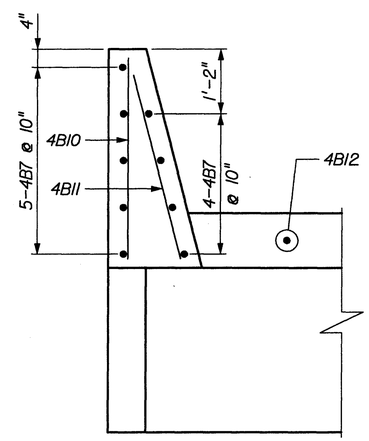

SECTION G-G

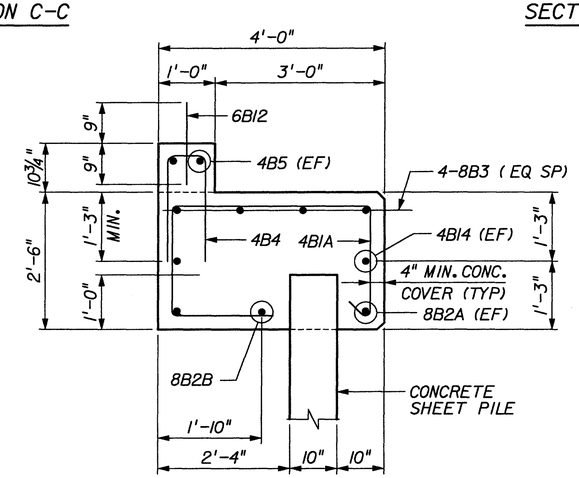

SECTION H-H

ESTIMATED QUANTITIES - ENTRANCE ROAD BRIDGE

ITEM		UNIT	QUANTITY END BENT 1	QUANTITY END BENT 2
CLASS IV CONCRETE (SUBSTRUCTURE)	CAP	CU. YD.	20.07	20.07
	WINGPOSTS		2.58	2.58
	TOTAL		22.65	22.65
REINFORCING STEEL (SUBSTRUCTURE)		LBS.	2283	2283
PRESTRESSED CONCRETE PILES (18" SQUARE)		LIN. FT.	SEE SUMMARY OF BRIDGE PAY ITEMS	

ESTIMATED QUANTITIES - MAINTENANCE ROAD BRIDGE

ITEM		UNIT	QUANTITY END BENT 1	QUANTITY END BENT 2
CLASS IV CONCRETE (SUBSTRUCTURE)	CAP	CU. YD.	18.27	18.27
	WINGPOSTS		2.58	2.58
	TOTAL		20.85	20.85
REINFORCING STEEL (SUBSTRUCTURE)		LBS.	1739	1739
PRESTRESSED CONCRETE PILES (18" SQUARE)		LIN. FT.	SEE SUMMARY OF BRIDGE PAY ITEMS	

REVISIONS	BY	DATE

SURVEY BOOK No.:		
SURVEY DIVISION	BY	DATE
SURVEYED	---	---
TECHNICIAN	---	---
CHECKED	---	---
DESIGN DIVISION		
DESIGNED	MT	1/00
DRAWN	DCW	1/00
CHECKED	MCM	6/01

PINELLAS COUNTY, FLORIDA
Public Works

URS
URS CORPORATION SOUTHERN
7650 WEST COURTNEY CAMPBELL CAUSEWAY
TAMPA, FLORIDA 33607-1462
NO. 00000002

MURRAY C. McDONOUGH FLORIDA REGISTERED PROFESSIONAL ENGINEER No. 43353 — DATE 2/25/03

FORT DESOTO
WATER CIRCULATION IMPROVEMENTS

END BENT DETAILS

DATE: FEBRUARY, 2003
PROJECT ID NO.: 921573
SURVEY FILE NO.: N/A
SHEET 20 OF 41
FILE:...\BABTB1Ø3.D
VIEW: PLOT

e:\bridges\fort desoto\water circulation improvements\entrance road\babtb1Ø3.dg

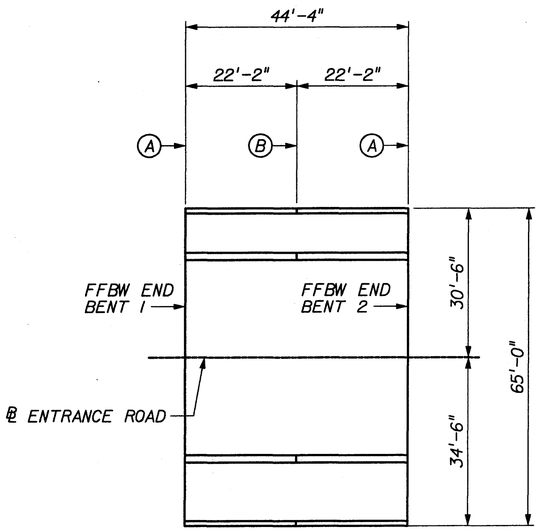

PLAN

LEGEND:

- (A) DECK JOINT SEAL. SEE DETAILS, SHEET 23
- (B) ℄ 1/2" V-GROOVE IN BOTH FACES AND TOP OF BARRIER.
- (LE) DENOTES LEFT EDGE
- (LG) DENOTES LEFT GUTTER
- (PG) DENOTES PROFILE GRADE
- (RG) DENOTES RIGHT GUTTER
- (RE) DENOTES RIGHT EDGE

INCR. DIST. - THE DISTANCE ALONG EDGE LINES, GUTTER LINES AND PROFILE GRADE LINE BETWEEN POINTS.

POINTS - POINT 0 IS LOCATED AT FFBW OF END BENT 1 AND POINT 4 IS LOCATED AT FFBW END BENT 2.

ELEVATIONS - ELEVATIONS ARE TOP OF CONCRETE TOPPING ELEVATIONS AT EDGE LINES, GUTTER LINES AND PROFILE GRADE LINE.

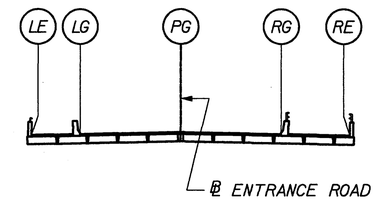

SECTION THRU DECK

FINISH GRADE ELEVATIONS AT POINTS						
LOCATION	INCR. DIST.	0	1	2	3	4
LE	11.085	9.850	9.817	9.783	9.750	9.717
LG	11.085	10.040	10.007	9.973	9.940	9.907
PG	11.085	10.440	10.407	10.373	10.340	10.307
RG	11.085	10.040	10.007	9.973	9.940	9.907
RE	11.085	9.770	9.737	9.703	9.670	9.637

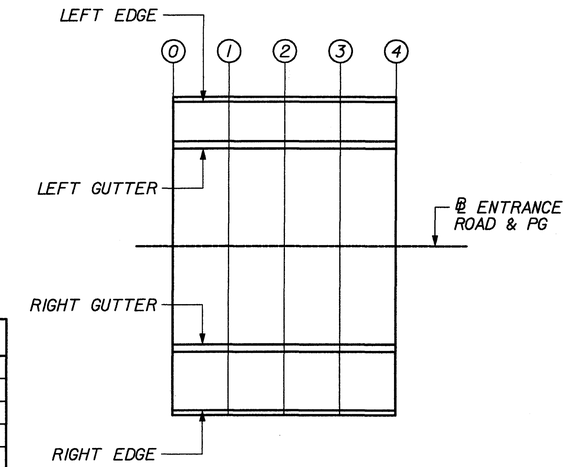

PLAN

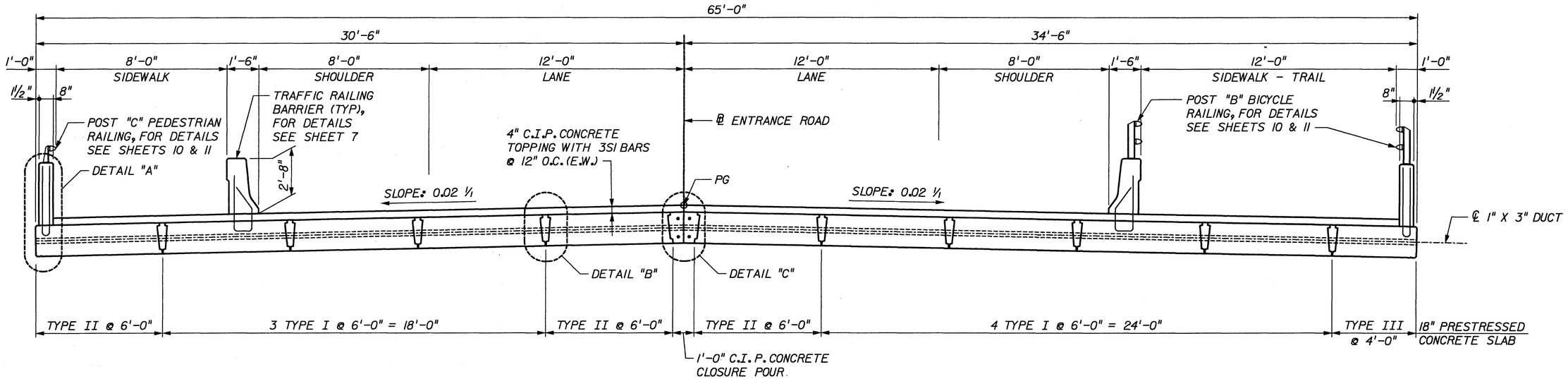

TYPICAL SECTION

STATIONS LOOKING AHEAD

REVISIONS	BY	DATE

SURVEY BOOK No.:		
SURVEY DIVISION	BY	DATE
SURVEYED	---	---
TECHNICIAN	---	---
CHECKED	---	---
DESIGN DIVISION		
DESIGNED	TH	1/00
DRAWN	KAC	1/00
CHECKED	MCM	6/01

PINELLAS COUNTY, FLORIDA
Public Works

URS

URS CORPORATION SOUTHERN
7650 WEST COURTNEY
CAMPBELL CAUSEWAY
TAMPA, FLORIDA 33607-1463
NO. 00000002

MURRAY C. McDONOUGH FLORIDA REGISTERED PROFESSIONAL ENGINEER No. 43353 — DATE

FORT DESOTO
WATER CIRCULATION
IMPROVEMENTS

SUPERSTRUCTURE PLAN
TYPICAL SECTION & DECK ELEVATIONS
ENTRANCE ROAD BRIDGE

DATE: FEBRUARY, 2003
PROJECT ID NO.: 921573
SURVEY FILE NO.: N/A
SHEET 21 OF 41
FILE: ...\BDECB101.D
VIEW: PLOT

e:\bridges\fort desoto\water circulation improvements\entrance road\bdecb101.dg

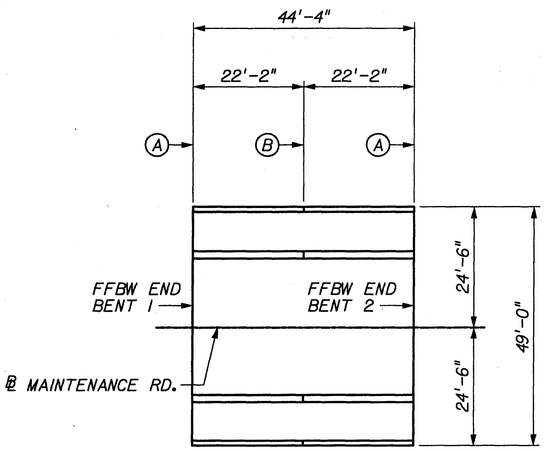

PLAN

LEGEND:

- (A) DECK JOINT SEAL. SEE DETAILS, SHEET 23
- (B) ℄ 1/2" V-GROOVE IN BOTH FACES AND TOP OF BARRIER.
- (LE) DENOTES LEFT EDGE
- (LG) DENOTES LEFT GUTTER
- (PG) DENOTES PROFILE GRADE
- (RG) DENOTES RIGHT GUTTER
- (RE) DENOTES RIGHT EDGE

INCR. DIST. - THE DISTANCE ALONG EDGE LINES, GUTTER LINES AND PROFILE GRADE LINE BETWEEN POINTS.

POINTS - POINT 0 IS LOCATED AT FFBW OF END BENT 1 AND POINT 4 IS LOCATED AT FFBW END BENT 2.

ELEVATIONS - ELEVATIONS ARE TOP OF CONCRETE TOPPING ELEVATIONS AT EDGE LINES, GUTTER LINES AND PROFILE GRADE LINE.

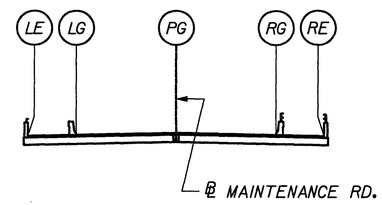

SECTION THRU DECK

FINISH GRADE ELEVATIONS AT POINTS						
LOCATION	INCR. DIST.	0	1	2	3	4
LE	11.085	9.966	9.933	9.900	9.866	9.833
LG	11.085	10.160	10.127	10.093	10.060	10.027
PG	11.085	10.440	10.407	10.373	10.340	10.307
RG	11.085	10.160	10.127	10.093	10.060	10.027
RE	11.085	9.966	9.933	9.900	9.866	9.833

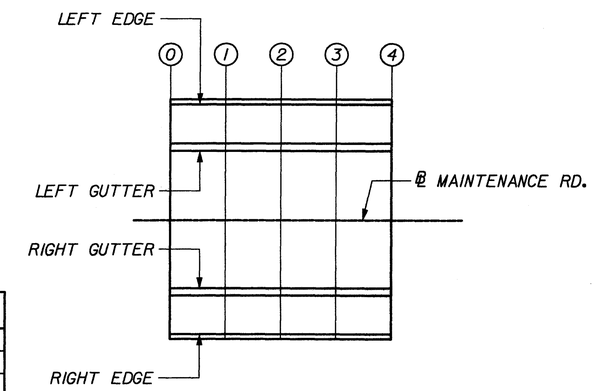

PLAN

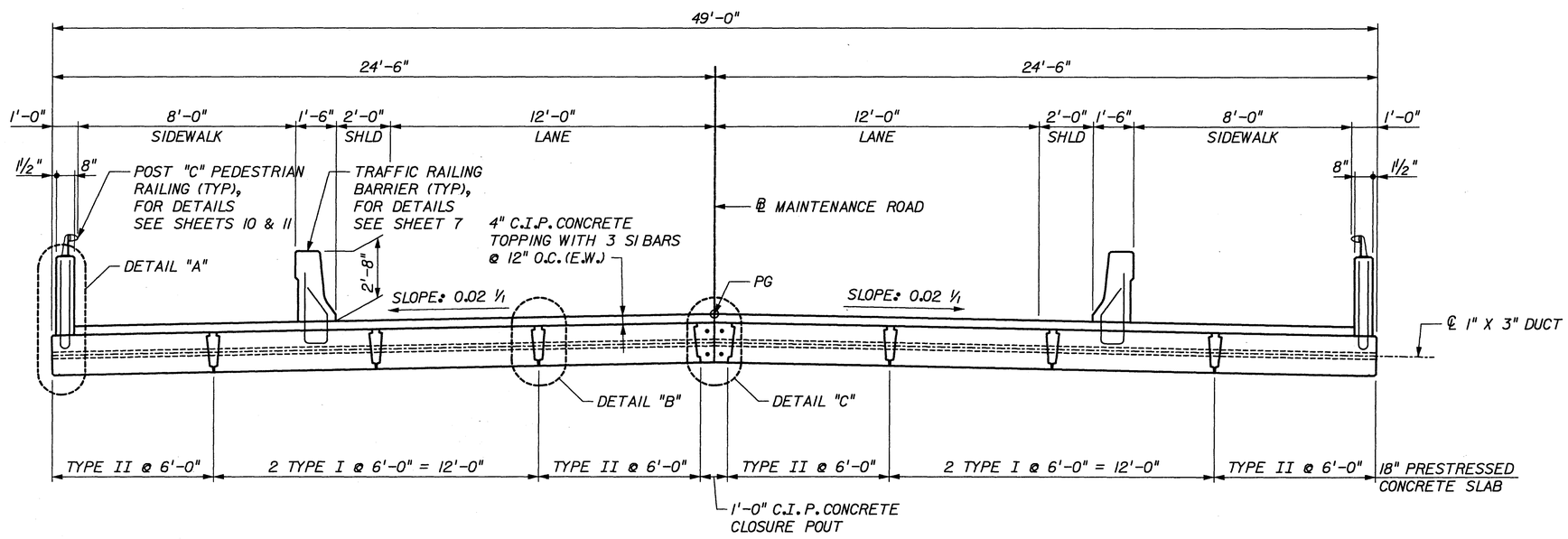

TYPICAL SECTION

STATIONS LOOKING AHEAD

REVISIONS	BY	DATE

SURVEY BOOK No.:		
SURVEY DIVISION	BY	DATE
SURVEYED	---	---
TECHNICIAN	---	---
CHECKED	---	---
DESIGN DIVISION		
DESIGNED	MCM	1/00
DRAWN	KAC	2/00
CHECKED	MCM	6/01

PINELLAS COUNTY, FLORIDA
Public Works

URS CORPORATION SOUTHERN
7650 WEST COURTNEY CAMPBELL CAUSEWAY
TAMPA, FLORIDA 33607-1462
NO. 00000002

MURRAY C. McDONOUGH FLORIDA REGISTERED PROFESSIONAL ENGINEER No. 43353

2/28/03
DATE

FORT DESOTO
WATER CIRCULATION IMPROVEMENTS

SUPERSTRUCTURE PLAN
TYPICAL SECTION & DECK ELEVATIONS
MAINTENANCE ROAD BRIDGE

DATE: FEBRUARY, 2003
PROJECT ID NO.: 921573
SURVEY FILE NO.: N/A
SHEET 22 OF 41
FILE: ...\B0ECB201.D
VIEW: PLOT

e:\bridges\fort desoto\water circulation improvements\maintenance road\bdecb201.dg

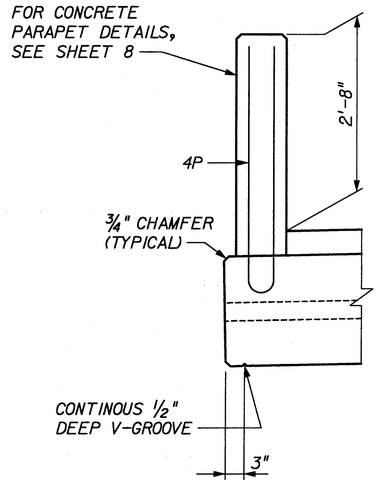

DETAIL "A"

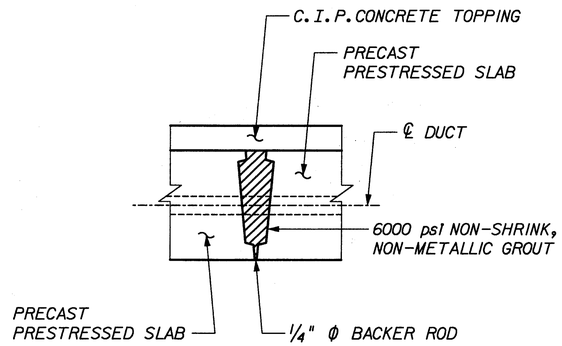

DETAIL "B"

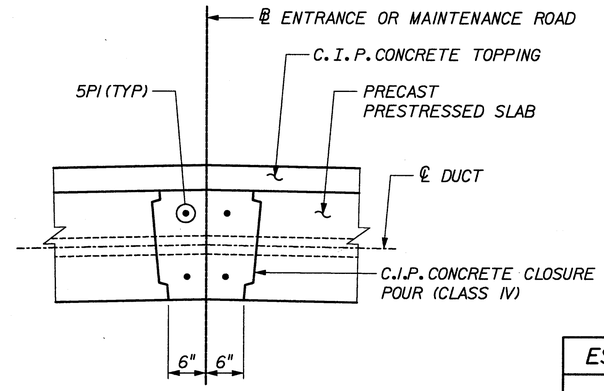

DETAIL "C"

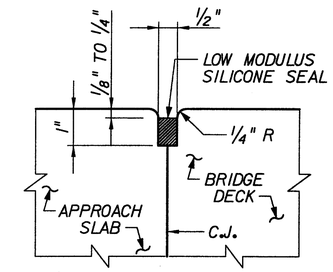

DETAIL "D"

ESTIMATED QUANTITIES - ENTRANCE ROAD BRIDGE			
ITEM		UNIT	QUANTITY SPAN 1
CLASS IV CONCRETE (BRIDGE DECK)	C.I.P. TOPPING	CU. YD.	34.48
	END DIAPHRAGMS		6.22
	TOTAL		40.70
PRESTRESSED CONCRETE SLAB		SQ. FT.	2773
REINFORCING STEEL (SUPERSTRUCTURE)		LBS.	2403

ESTIMATED QUANTITIES - MAINTENANCE ROAD BRIDGE			
ITEM		UNIT	QUANTITY SPAN 1
CLASS IV CONCRETE (BRIDGE DECK)	C.I.P. TOPPING	CU. YD.	25.72
	END DIAPHRAGMS		5.29
	TOTAL		31.01
PRESTRESSED CONCRETE SLAB		SQ. FT.	2080
REINFORCING STEEL (SUPERSTRUCTURE)		LBS.	1819

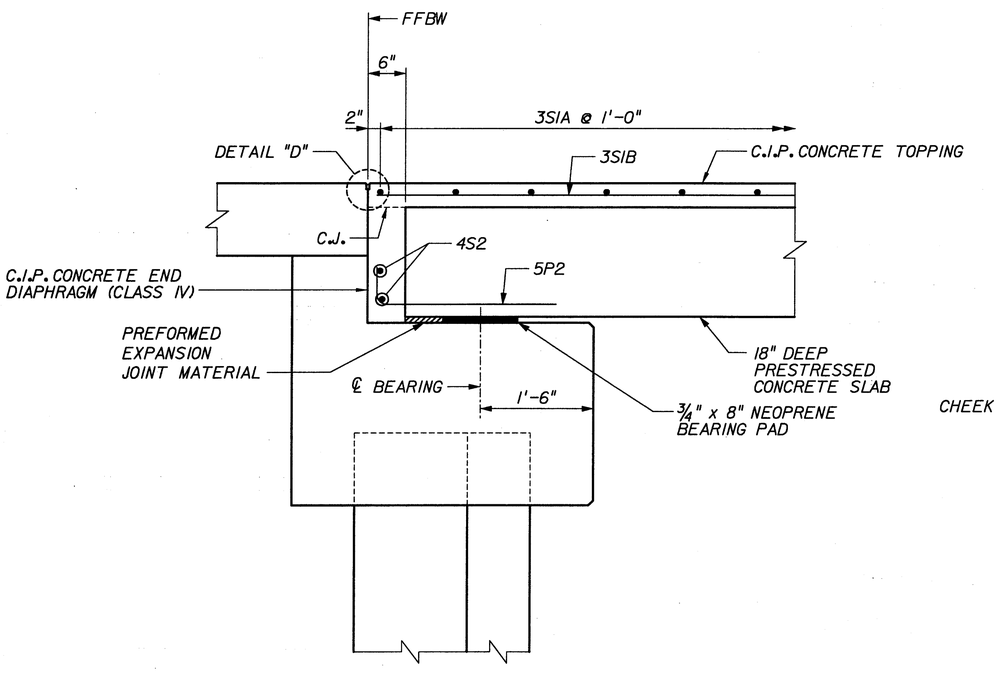

TYPICAL DETAIL AT JOINT

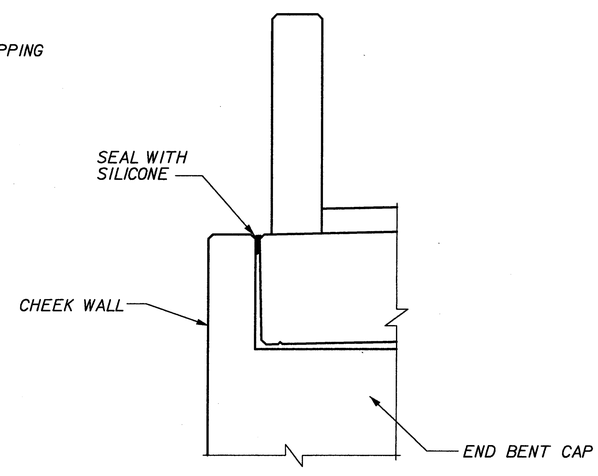

CHEEK WALL DETAIL

JOINT SEALANT NOTES:

1. THE DECK JOINT SEALANT SHALL BE ULTRA LOW MODULUS SILICONE SEALANT.
2. THE JOINT SURFACES SHALL BE SAND BLASTED CLEAN OF ANY RESIDUAL CONTAMINANTS, DRY AND DUST-FREE PRIOR TO JOINT INSTALLATION. BLOW OUT DUST, LOOSE PARTICLES AND OTHER DEBRIS FROM THE JOINTS USING OIL AND WATER FREE COMPRESSED AIR.
3. THE JOINT SEALANT MATERIAL SHALL BE DELIVERED TO THE JOB SITE IN THE MANUFACTURER'S ORIGINAL SEALED CONTAINER AND INSTALLED AS PER MANUFACTURER'S RECOMMENDATIONS.
4. AFTER THE JOINT HAS BEEN SEALED, ALL SURPLUS SEALANT OR OTHER RESIDUE ON THE DECK SHALL BE PROMPTLY REMOVED.
5. THE COST OF ALL LABOR AND MATERIALS REQUIRED FOR THE CONSTRUCTION OF THE JOINTS SHOWN ON THIS SHEET SHALL BE INCLUDED IN THE COST OF THE SUPERSTRUCTURE.

REVISIONS	BY	DATE

SURVEY BOOK No.:		
SURVEY DIVISION	BY	DATE
SURVEYED	---	---
TECHNICIAN	---	---
CHECKED	---	---
DESIGN DIVISION		
DESIGNED	MCM	1/00
DRAWN	KAC	1/00
CHECKED	MCM	1/00

PINELLAS COUNTY, FLORIDA
Public Works

URS
URS CORPORATION SOUTHERN
7650 WEST COURTNEY CAMPBELL CAUSEWAY
TAMPA, FLORIDA 33607-1462
NO. 00000002

MURRAY C. McDONOUGH FLORIDA REGISTERED PROFESSIONAL ENGINEER No. 43353

2/28/03
DATE

FORT DESOTO
WATER CIRCULATION IMPROVEMENTS

SUPERSTRUCTURE DETAILS

DATE: FEBRUARY, 2003
PROJECT ID NO.: 921573
SURVEY FILE NO.: N/A
SHEET 23 OF 41
FILE: ...\BDECB102.D
VIEW: PLOT

e:\bridges\fort desoto\water circulation improvements\entrance road\bdecb102.dg

PRESTRESSED SLAB UNIT NOTES

CONCRETE CLASS: SEE GENERAL NOTES

ENVIRONMENT: SEE GENERAL NOTES

MATERIAL PROPERTIES:

CONCRETE STRENGTH: PRECAST PANELS — F'c = 5500 PSI
F'ci = 4000 PSI

C-I-P END DIAPHRAGMS — F'c = 5500 PSI

REINFORCING STEEL: ASTM A615, GRADE 60.
WELDED WIRE FABRIC: ASTM A185 AND ASTM A497.
PRESTRESSING STRANDS: 1/2 INCH DIAMETER ASTM A416, GRADE 270. LOW RELAXATION AND SHALL BE STRESSED TO 31.00 KIPS
POST-TENSIONING STRANDS: 1/2 INCH DIAMETER ASTM A416, GRADE 270, LOW RELAX.

STRAND DETENSIONING: THE TRANSFER OF STRESSES SHALL BE DONE IN ACCORDANCE WITH THE SPECIFICATIONS.

BARS FOR BARRIER OR RAILING: THE SPACING OF THE BARS MAY BE ADJUSTED TO CLEAR THE POST-TENSIONING BLOCKOUTS. HOWEVER, THE NUMBER OF BARS SHALL NOT BE REDUCED. THE CONTRACTOR SHALL SHOW THE PROPOSED SPACING FOR THE BARS ON THE SHOP DRAWINGS.

CAMBER: CAMBER IS THE AMOUNT OF RISE THAT OCCURS AT MIDSPAN OF THE BEAM DUE TO THE PRESTRESSING FORCE. THE CAMBER WILL INCREASE DUE TO CREEP DURING STORAGE UNLESS PRECAUTIONS ARE TAKEN. THEREFORE, THE CONTRACTOR SHALL AVOID THE DEVELOPMENT OF ADDITIONAL DIFFERENTIAL CAMBER BETWEEN PANELS, FOR ANY SPAN, DURING STORAGE BY LOADING OR OTHER APPROVED METHODS.

SURFACE FINISH: THE TOPS OF ALL SLAB UNITS SHALL BE ROUGH FLOATED AND THEN SCRUBBED TRANSVERSLY WITH A COURSE WIRE BRUSH TO REMOVE ALL LAITANCE AND TO PRODUCE A ROUGHENED SURFACE FOR BONDING. ALL OTHER SURFACES OF THE BEAM SHALL RECEIVE A CLASS 3 SURFACE FINISH. THE EDGES OF THE TOP SURFACE OF THE UNITS SHALL BE FINISHED BY USE OF A SMALL RADIUS TOOL.

DIAPHRAGM: THE END DIAPHRAGMS SHALL BE CAST-IN-PLACE AFTER THE TRANSVERSE POST-TENSIONING HAS BEEN COMPLETED. THE COST OF MATERIALS AND LABOR REQUIRED FOR THE CONSTRUCTION OF DIAPHRAGMS SHALL BE INCLUDED IN THE COST OF CONCRETE AND REINFORCING STEEL FOR THE SUPERSTRUCTURE.

NEOPRENE BEARING PAD: PLAIN NEOPRENE BEARING PADS SHALL BE PROVIDED IN ACCORDANCE WITH DETAILS IN THE PLANS AND DEPARTMENTS SPECIFICATIONS. THE PADS ARE CONSIDERED TO BE INCIDENTAL TO THE COST OF THE PRESTRESSED SLAB UNITS; THEREFORE, NO SEPARATE PAYMENT WILL BE MADE.

POST-TENSIONING: THE WORK AND MATERIALS REQUIRED FOR POST-TENSIONING SHALL CONFORM TO SECTION B460 OF THE SPECIFICATIONS. THIS WORK IS CONSIDERED TO INCIDENTAL TO THE COST OF THE PRESTRESSED SLAB UNITS; THEREFORE, NO SEPARATE PAYMENT WILL BE MADE.

EACH POST-TENSIONING TENDON SHALL CONSIST OF THREE (3) 1/2 INCH DIAMETER STRANDS.

THE POST-TENSIONING DESIGN ASSUMPTIONS ARE AS FOLLOWS:

ANCHOR SET	= 0.375 INCHES
FRICTION COEFFICIENT	= 0.0
WOBBLE COEFFICIENT	= 0.0002/FT

THE JACKING FORCE REQUIRED BEFORE ANCHOR SET IS 31.00 KIPS FOR EACH STRAND.

THE CONTRACTOR MAY SUBMIT FOR REVIEW AND APPROVAL AN ALTERNATE TRANSVERSE POST-TENSIONING SCHEME UTILIZING HIGH STRENGTH STEEL BARS IN LIEU OF TENDONS. BARS SHALL BE 1 INCH DIAMETER, GRADE 150, STRESSED TO 0.7Fpu AND MEET THE REQUIREMENTS OF ASTM A722, TYPE II. SPACING AND LOCATION OF BARS SHOULD MATCH THE SPACING AND LOCATION OF TENDONS DETAILED IN THESE PLANS.

DUCTS, COUPLERS, TRANSITIONS (TRUMPETS) SHALL BE FABRICATED FROM VIRGIN HIGH DENSITY POLYETHYLENE. THE DUCTS SHALL BE FLAT CORRUGATED DUCTS IN ACCORDANCE WITH THE PLANS. DURING CASTING OF THE PANELS, THE DUCTS SHALL BE HELD IN PROPER ALIGNMENT BY A RIGID MANDREL SUFFICIENT TO PREVENT DISPLACEMENT. DUCTS SHALL HAVE A GROUTING VENT AT EACH ANCHORAGE. DUCT SPLICES SHALL BE WATERTIGHT.

EXTERIOR BLOCKOUTS SHALL BE FILLED WITH AN APPROVED NON-SHRINK, NON-METTALIC GROUT AFTER COMPLETION OF THE POST-TENSIONING OPERATION. PRIOR TO GROUTING BLOCKOUTS, ALL CONCRETE SURFACES IN CONTACT WITH THE GROUT SHALL BE ROUGHENED, AND THE METALLIC ANCHORAGE DEVICES AND STRANDS SHALL BE CLEANED TO THE SATISFACTION OF THE ENGINEER; AND IMMEDIATELY BEFORE GROUTING, THE BLOCKOUT CONCRETE SURFACES AND ANCHORAGE DEVICES SHALL BE COATED WITH AN APPROVED BONDING COMPOUND.

SHOP DRAWINGS: SHOP DRAWINGS FOR THE PRESTRESSED SLAB UNITS SHALL SHOW A COMPLETE DETENSIONING SCHEDULE SO AS TO MINIMIZE TENSION IN THE CONCRETE DURING RELEASE OF THE STRANDS. DETAILED CONCRETE STRESSES DURING EACH STRESSING OPERATION OF DETENSIONING SHALL BE SUBMITTED WITH THE SHOP DRAWINGS. SHOP DRAWINGS SHALL SHOW COMPLETE DETAILS OF THE PANELS INCLUDING REINFORCING STEEL. THE CONTRACTOR SHALL ALSO INCLUDE IN THE SHOP DRAWINGS THE POST-TENSIONING INFORMATION BY THE SPECIFICATIONS.

PAYMENT: THE COST OF PRESTRESSED SLAB UNITS SHALL BE PAID FOR AT THE UNIT PRICE PER LINEAR FOOT AND SHALL INCLUDE ALL MATERIALS REQUIRED FOR THE FABRICATION OF THE PRESTRESSED SLAB UNITS AS WELL AS ERECTION OF THE SLABS. THE UNIT PRICE SHALL ALSO INCLUDE THE COST OF ALL INCIDENTAL MATERIALS AND WORK SUCH AS: NEOPRENE BEARING PADS, SHIM PLATES, TRANSVERSE POST-TENSIONING (INCLUDING HARDWARE), AND GROUTING. PAYMENT SHALL BE MADE ON THE QUANTITY COMPLETE IN PLACE AND ACCEPTED. GRINDING OF THE 4 INCH CIP TOPPING SURFACE, IF NEEDED, TO PROVIDE A SMOOTH RIDING SURFACE IS ALSO CONSIDERED TO BE INCIDENTAL WORK. FINAL PAY LENGTHS SHALL BE THE PLAN QUANTITY WHICH IS BASED ON THE CASTING AREA OF THE PANELS.

PAY ITEM NUMBER IS AS FOLLOWS:

450-2-3 PRESTRESSED SLAB UNITS TRANSVERSELY POST-TENSIONED (48"x18"XTYPE III)
450-2-4 PRESTRESSED SLAB UNITS TRANSVERSELY POST-TENSIONED (72"x18"XTYPE II)
450-2-5 PRESTRESSED SLAB UNITS TRANSVERSELY POST-TENSIONED (72"x18"XTYPE I)

CONSTRUCTION NOTES

EACH SLAB UNIT IS DESIGNED TO BEAR EQUALLY ON THREE BEARING PADS. SHIMMING AND/OR GRINDING UNDER ONE OR MORE PADS MAY BE NECESSARY TO OBTAIN PROPER BEARING. THE CONTRACTOR SHALL ADHERE TO THE FOLLOWING INSTALLATION SEQUENCE DURING ERECTION OF THE SLAB UNITS:

1. MARK THEORETICAL PAD LOCATIONS (OUTLINES) ON THE BRIDGE SEAT FOR THE TWO CENTER SLAB UNITS. PLACE PADS ON THE MARKED LOCATIONS AND ERECT THESE SLAB UNITS FIRST. PAD LOCATIONS SHALL BE ADJUSTED IF NECESSARY, TO CENTER THE PADS UNDER THE SLAB UNITS.

   DETERMINE THE NEED FOR SHIMS AND GRINDING BY PERFORMING THE FOLLOWING TESTS:

   A) CHECK THE BEARINGS. IF CONTACT BETWEEN SLAB UNIT AND PAD IS NOT APPARENT, SHIMMING AT THE LOW BEARING AND/OR GRINDING AT THE ADJACENT HIGH BEARING IS REQUIRED. GRINDING OF THE CONCRETE BRIDGE SEAT SHALL BE LIMITED TO 3/8 INCH MAXIMUM.

   B) IF THERE IS CONTACT BETWEEN SLAB UNIT AND PAD BUT THE SEALING RIBS AROUND THE PAD PERIMETER (TOP AND BOTTOM) ARE NOT COMPRESSED BY AT LEAST 1/4 INCH TOTAL, INSERT A SHIM PLATE BETWEEN THE LOW BRIDGE SEAT AND THE PAD. AS AN OPTION, THE CONTRACTOR MAY GRIND THE ADJACENT HIGH BEARING IN ACCORDANCE WITH A) ABOVE.

2. CHECK CAREFULLY THE LOCATION (POSITION, ALIGNMENT, ETC.) OF THE ERECTED SLAB UNIT BEFORE PROCEEDING WITH THE ERECTION OF THE OTHER SLAB UNITS.

3. ERECT ADJACENT SLAB UNITS BY REPEATING STEPS 1 AND 2 ABOVE. POST-TENSIONING DUCTS MUST LINE UP AND PADS MUST BE CENTERED UNDER SLAB UNITS.

4. AFTER ERECTION OF ALL SLAB UNITS, A FINAL CHECK OF THEIR POSITIONS SHALL BE DONE PRIOR TO PROCEEDING WITH ADDITIONAL WORK.

5. INSERT BACKER RODS IN KEYWAYS BETWEEN SLAB UNITS.

6. JOIN POST-TENSIONING DUCTS AS DETAILED IN THE PLANS. THE COUPLERS AT THE JOINTS SHALL BE SECURELY WRAPPED WITH DUCT TAPE TO PREVENT GROUT PENETRATION INTO THE DUCTS DURING GROUTING OF THE KEYWAYS. DO NOT INSTALL P.T. STRANDS AT THIS TIME.

7. PLACE A LONGITUDINAL NO. 4 BAR IN EACH KEYWAY AS SHOWN IN THE PLANS, AND FILL THE LONGITUDINAL KEYWAYS WITH APPROVED NON-SHRINK, NON-METALLIC GROUT. THE CONTRACTOR SHALL INCLUDE WITH THE SHOP DRAWINGS A LETTER FROM THE GROUT MANUFACTURER CERTIFYING THAT THE PROPOSED GROUT IS PROPER FOR ITS INTENDED USE. THE LETTER SHALL ALSO INCLUDE RECOMMENDATIONS FOR SURFACE PREPARATION AND FOR MIXING, PLACING AND CURING OF THE GROUT.

   THE PRECAST CONCRETE SURFACES SHALL BE PREPARED, AND THE GROUT SHALL BE MIXED, PLACED AND CURED IN STRICT ADHERENCE TO THE MANUFACTURER'S RECOMMENDATIONS. HOWEVER, THE TOTAL CURING PERIOD SHALL BE AT LEAST 72 HOURS.

   POST-TENSIONING MAY START AFTER GROUT HAS CURED AT LEAST 48 HOURS AND REACHED A MINIMUM STRENGTH OF 4000 PSI.

   THE GROUTED KEYWAYS SHALL NOT BE DISTURBED BY VEHICULAR TRAFFIC OR HEAVY CONSTRUCTION ACTIVITIES PRIOR TO COMPLETION OF POST-TENSIONING AND TOTAL CURING.

8. INSTALL TENDONS IN THE DUCTS. EACH TENDON SHALL CONSIST OF THREE (3) SEVEN-WIRE 1/2 INCH STRANDS. THE STRANDS SHALL MEET THE REQUIREMENTS OF ASTM A416, GRADE 270 AND HAVE LOW RELAXATION PROPERTIES. THE ENDS OF THE THREE (3) STRANDS SHALL BE "COLOR CODED" TO INSURE SAME POSITION AT BOTH ANCHORAGE POINTS.

   POST-TENSION THE MIDSPAN OR THE TWO (2) CENTERMOST FIRST. THEN EVERY OTHER TENDON ON BOTH SIDES IN A SEQUENCE THAT KEEPS THE MAXIMUM ECCENTRICITY ABOUT MIDSPAN TO ONE (1) TENDON. THEN POST-TENSION THE PREVIOUSLY SKIPPED TENDONS BEGINNING WITH THE TWO (2) CENTERMOST (NEAR MIDSPAN) ON BOTH SIDES IN A SEQUENCE THAT KEEPS THE MAXIMUM ECCENTRICITY ABOUT MIDSPAN TO ONE (1) TENDON, UNTIL ALL TENDONS ARE STRESSED.

9. GROUT DUCTS AND FILL ANCHORAGE BLOCKOUTS WITH APPROVED NON-SHRINK, NON-METALLIC GROUT. THE GROUTED TENDONS SHALL NOT BE DISTURBED BY VEHICULAR TRAFFIC OR HEAVY LOADS FOR A PERIOD OF AT LEAST 72 HOURS. THE STRANDS SHALL BE STRESSED FROM ONE END, ALTERNATING BRIDGE SIDES, SO THAT EVERY OTHER TENDON IS STRESSED FROM THE SAME SIDE OF THE BRIDGE.

10. CONSTRUCT END DIAPHRAGMS.

11. REMOVE LIFTING DEVICES. ANY METAL SHALL BE REMOVED TO 1 INCH BELOW THE SURFACE AND THE HOLE IN THE CONCRETE SHALL BE GROUTED FLUSH. THE GROUT USED FOR THE PATCH SHALL BE AN APPROVED NON-SHRINK, NON-METALLIC GROUT. THE COLOR OF THE GROUT SHALL MATCH THE COLOR OF THE ADJACENT CONCRETE SURFACE.

12. CONSTRUCT CONCRETE PARAPETS (PEDESTRIAN/BICYCLE).

13. CONSTRUCT 4 INCH C.I.P TOPPING AND CHECK RIDING SURFACE IN ACCORDANCE WITH THE SPECIFICATIONS AND GRIND AREAS NOT IN COMPLIANCE. DEPTHS OF GRINDING SHALL BE LIMITED TO 1/4 INCH MAXIMUM.

14. CONSTRUCT TRAFFIC RAILING BARRIER (32" F SHAPE)

15. PROVIDE DECK GROOVING IN ACCORDANCE WITH SECTION 400-15 OF THE STANDARD SPECIFICATIONS.

16. CONSTRUCT TRANSVERSE DECK JOINTS AT SPAN ENDS IN ACCORDANCE WITH THE DETAILS.

REVISIONS	BY	DATE

SURVEY BOOK No.:		
SURVEY DIVISION	BY	DATE
SURVEYED	---	---
TECHNICIAN	---	---
CHECKED	---	---
DESIGN DIVISION		
DESIGNED	MCM	7/01
DRAWN	JBH	7/01
CHECKED	MCM	7/01

PINELLAS COUNTY, FLORIDA
Public Works

URS
URS CORPORATION SOUTHERN
7650 WEST COURTNEY
CAMPBELL CAUSEWAY
TAMPA, FLORIDA 33607-1462
NO. 00000002

MURRAY C. McDONOUGH FLORIDA REGISTERED PROFESSIONAL ENGINEER No. 43353 — DATE 2/25/03

FORT DESOTO
WATER CIRCULATION
IMPROVEMENTS

PRECAST CONCRETE SLAB NOTES

DATE: FEBRUARY, 2003
PROJECT ID NO.: 921573
SURVEY FILE NO.: N/A
SHEET 24 OF 41
FILE: ..\BPCSNT01.D
VIEW: PLOT

e:\bridges\fort desoto\water circulation improvements\entrance road\bpcsnt01.dg

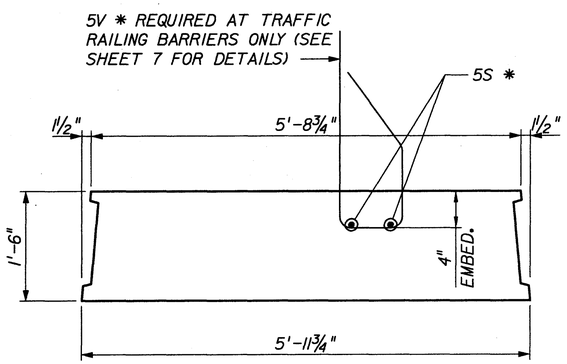

TYPE I

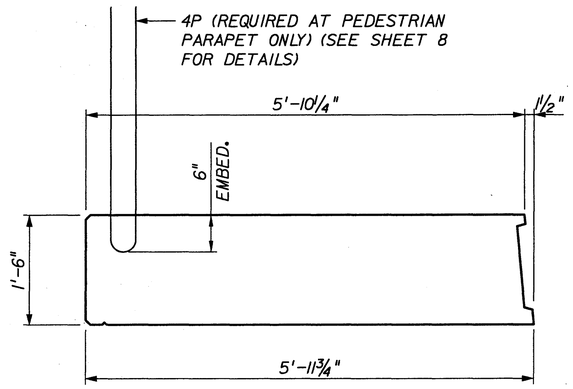

TYPE II

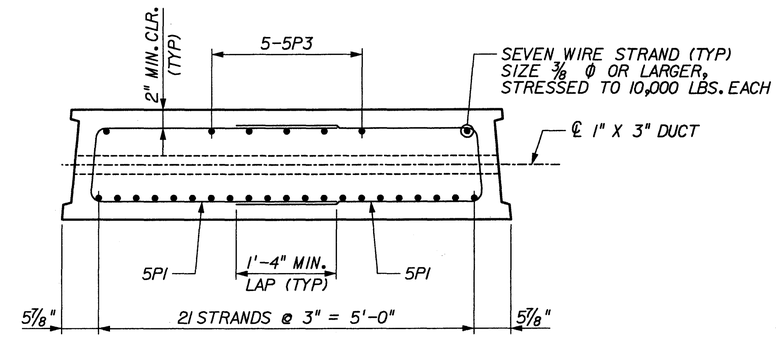

TYPE I & II PRESTRESSED CONCRETE SLAB DETAIL

(TYPE I SHOWN)

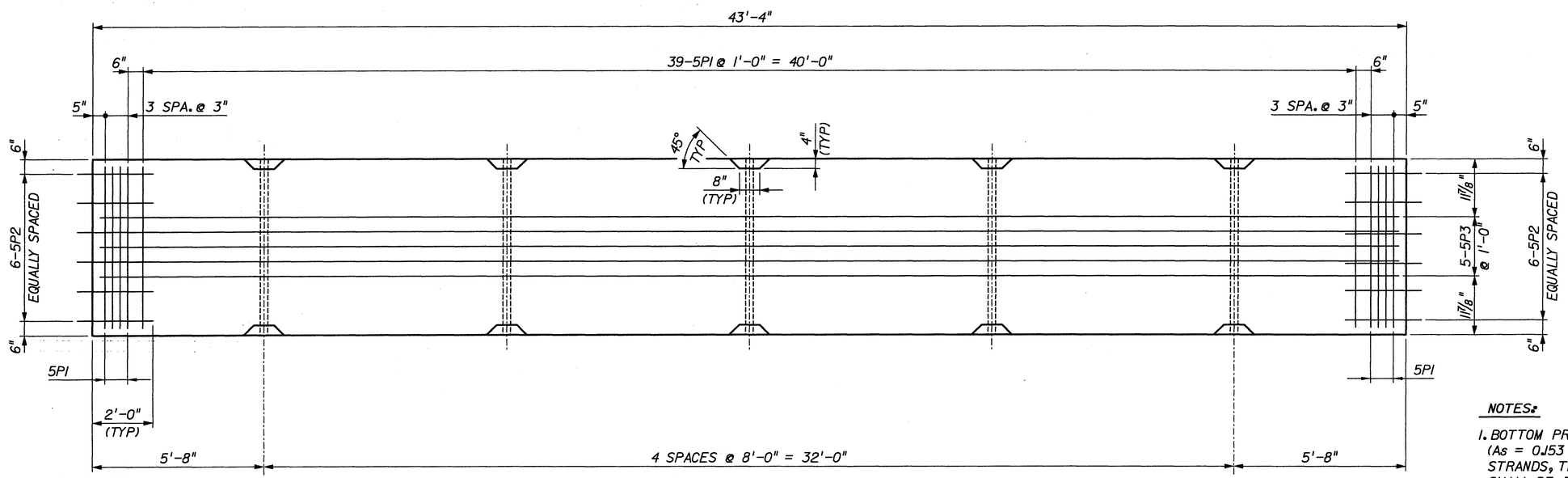

TYPE I & II PLAN VIEW OF PRESTRESSED CONCRETE SLAB

NOTES:

1. BOTTOM PRESTRESSING STANDS SHALL BE ½" Φ (As = 0.153 IN²), ASTM A416, GRADE 270, LOW RELAXATION STRANDS, TENSIONED TO 31.0 KIPS. THE STRANDS SHALL BE EXTENDED 3 INCHES BEYOND THE FACE OF THE PRESTRESSED SLAB INTO THE DIAPHRAGM.

2. PROVIDE ¾" CHAMFERS AT SECTION CORNER.

REVISIONS	BY	DATE

SURVEY BOOK No.:		
SURVEY DIVISION	BY	DATE
SURVEYED	---	---
TECHNICIAN	---	---
CHECKED	---	---
DESIGN DIVISION		
DESIGNED	MCM	1/00
DRAWN	KAC	1/00
CHECKED	MCM	7/01

PINELLAS COUNTY, FLORIDA
Public Works

URS
URS CORPORATION SOUTHERN
7650 WEST COURTNEY
CAMPBELL CAUSEWAY
TAMPA, FLORIDA 33607-1462
NO. 00000002

MURRAY C. McDONOUGH FLORIDA REGISTERED PROFESSIONAL ENGINEER No. 43353 — DATE

FORT DESOTO
WATER CIRCULATION IMPROVEMENTS

PRESTRESSED CONCRETE SLAB DETAILS (1)

DATE: FEBRUARY, 2003
PROJECT ID NO.: 921573
SURVEY FILE NO.: N/A
SHEET 25 OF 41
FILE: ..\BPCSB101.D
VIEW: PLOT

e:\bridges\fort desoto\water circulation improvements\entrance road\bpcsb101.dg

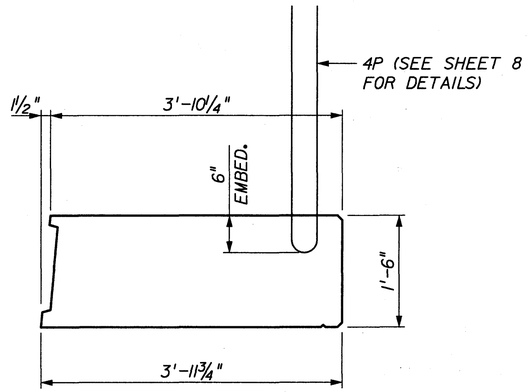

TYPE III

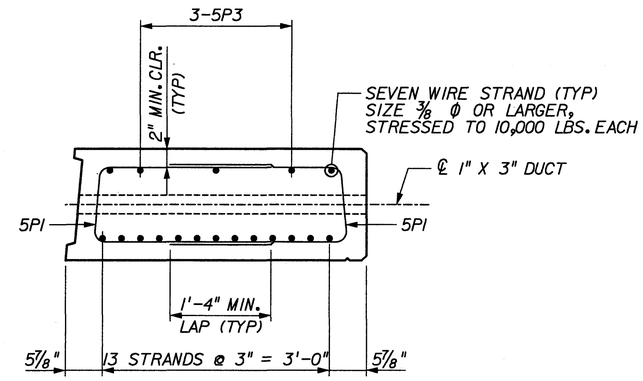

TYPE III PRESTRESSED CONCRETE SLAB DETAIL

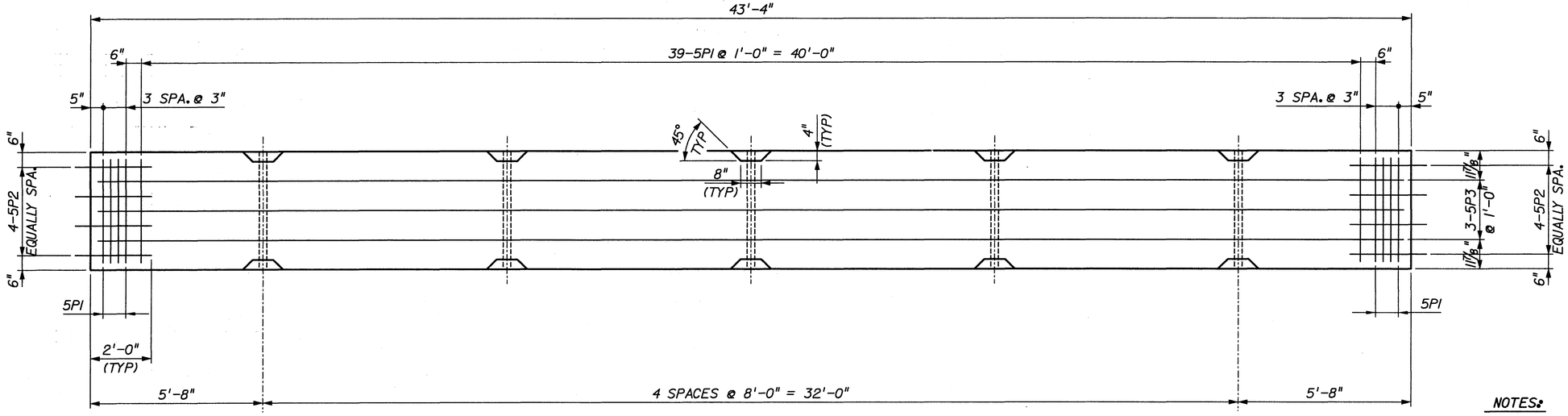

TYPE III PLAN VIEW OF PRESTRESSED CONCRETE SLAB

NOTES:

1. BOTTOM PRESTRESSING STANDS SHALL BE ½" Φ ($As = 0.153\ IN^2$), ASTM A416, GRADE 270, LOW RELAXATION STRANDS, TENSIONED TO 31.0 KIPS. THE STRANDS SHALL BE EXTENDED 3 INCHES BEYOND THE FACE OF THE PRESTRESSED SLAB INTO THE DIAPHRAGM.

2. PROVIDE ¾" CHAMFERS AT SECTION CORNER.

REVISIONS	BY	DATE

SURVEY BOOK No.:		
SURVEY DIVISION	BY	DATE
SURVEYED	---	---
TECHNICIAN	---	---
CHECKED	---	---
DESIGN DIVISION		
DESIGNED	MCM	1/00
DRAWN	KAC	1/00
CHECKED	MCM	7/01

PINELLAS COUNTY, FLORIDA
Public Works

URS
URS CORPORATION SOUTHERN
7650 WEST COURTNEY CAMPBELL CAUSEWAY
TAMPA, FLORIDA 33607-1462
NO. 00000002

MURRAY C. McDONOUGH FLORIDA REGISTERED PROFESSIONAL ENGINEER No. 43353

2/25/03
DATE

FORT DESOTO
WATER CIRCULATION IMPROVEMENTS

PRESTRESSED CONCRETE SLAB DETAILS (2)

DATE: FEBRUARY, 2003
PROJECT ID NO.: 921573
SURVEY FILE NO.: N/A
SHEET 26 OF 41
FILE: ...\BPCSB102.D
VIEW: PLOT

e:\bridges\fort desoto\water circulation improvements\entrance road\bpcsb102.dg

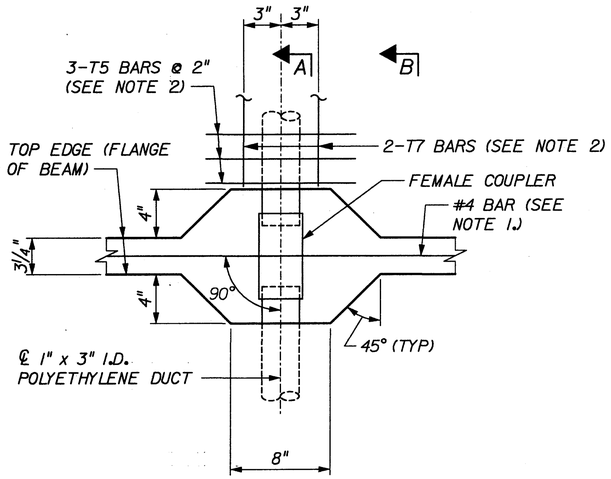

PLAN - INTERIOR BLOCKOUTS

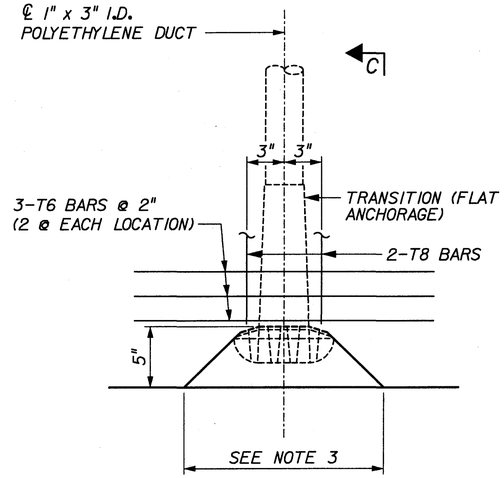

PLAN - EXTERIOR BLOCKOUTS

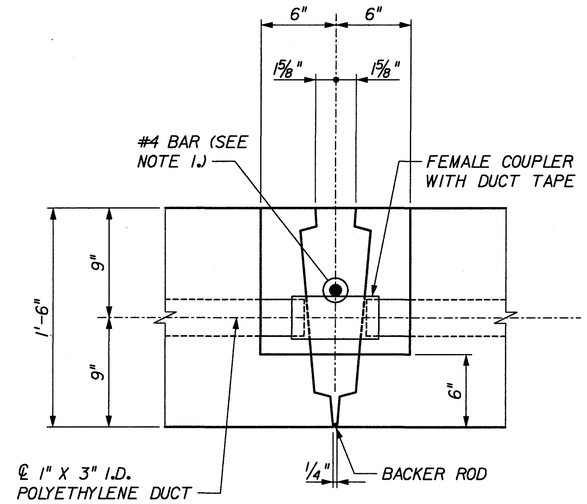

SECTION A-A

(SEE ALSO DETAIL "D")

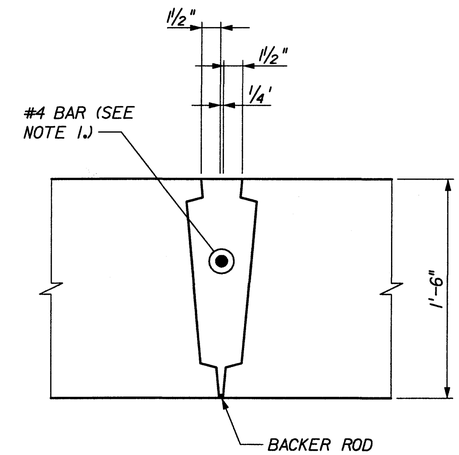

SECTION B-B

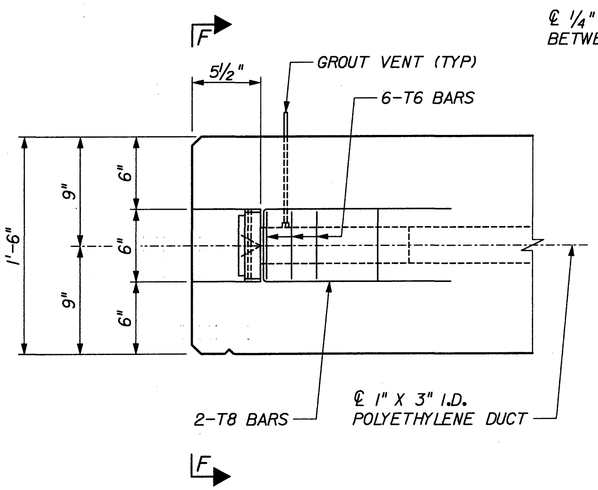

SECTION C-C

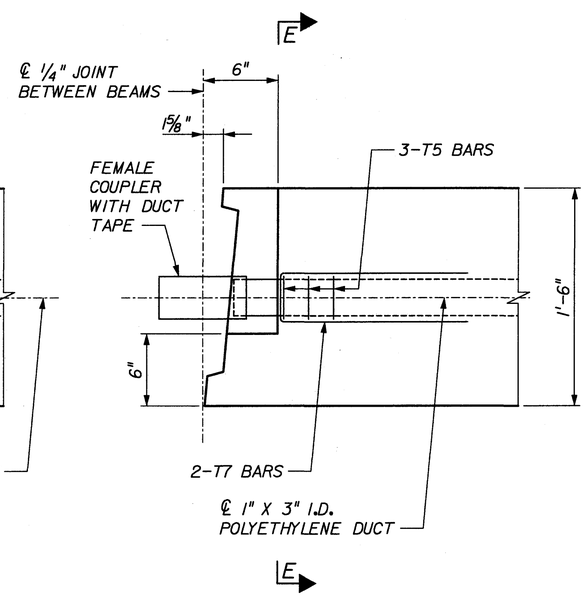

DETAIL "D"

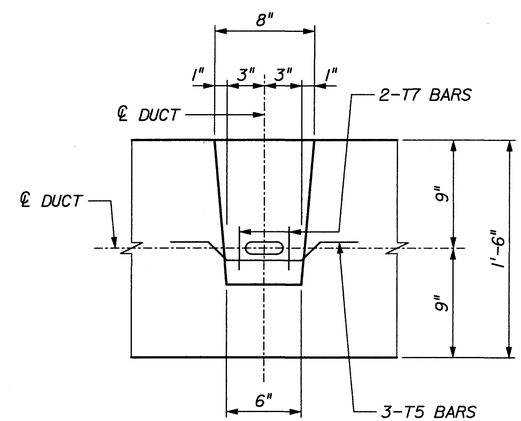

SECTION E-E

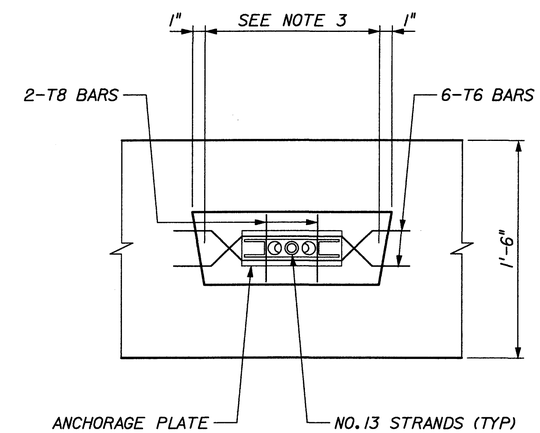

SECTION F-F

NOTES:

1. PLACE ONE FULL LENGTH #4 BAR ALONG ℄ KEYWAY. THE BAR SHALL BE SECURELY TIED TO THE DUCTS. LAP 1'-0" MIN. AT SPLICE.
2. BARS T5 AND T7 ARE REQUIRED ONLY ADJACENT TO TENDON DEVIATION.
3. DIMENSIONS TO SUIT ANCHORAGE DEVICE.

REVISIONS	BY	DATE

SURVEY BOOK No.:		
SURVEY DIVISION	BY	DATE
SURVEYED	---	---
TECHNICIAN	---	---
CHECKED	---	---
DESIGN DIVISION		
DESIGNED	MCM	1/00
DRAWN	KAC	1/00
CHECKED	MCM	7/01

PINELLAS COUNTY, FLORIDA
Public Works

URS
URS CORPORATION SOUTHERN
7650 WEST COURTNEY CAMPBELL CAUSEWAY
TAMPA, FLORIDA 33607-1462
NO. 00000002

MURRAY C. McDONOUGH FLORIDA REGISTERED PROFESSIONAL ENGINEER No. 43353 — DATE 2/25/03

FORT DESOTO
WATER CIRCULATION IMPROVEMENTS

PRESTRESSED CONCRETE SLAB DETAILS (3)

DATE: FEBRUARY, 2003
PROJECT ID NO.: 921573
SURVEY FILE NO.: N/A
SHEET 27 OF 41
FILE: ...\BPCSB103.D
VIEW: PLOT

e:\bridges\fort desoto\water circulation improvements\entrance road\bpcsb103.dg

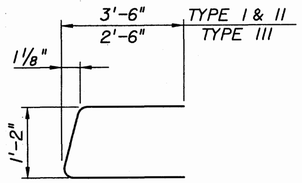

BAR 5P1 (#5 BAR)

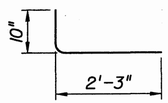

BAR 5P2 (#5 BAR)

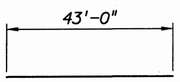

BAR 5P3 (#5 BAR)

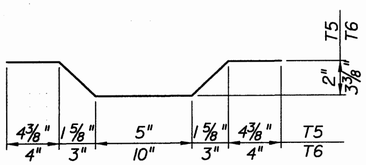

BAR T5 & T6 (D8 WIRE)

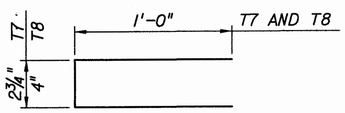

BAR T7 & T8 (D8 WIRE)

PRECAST CONCRETE SLAB
BAR BENDING DETAILS

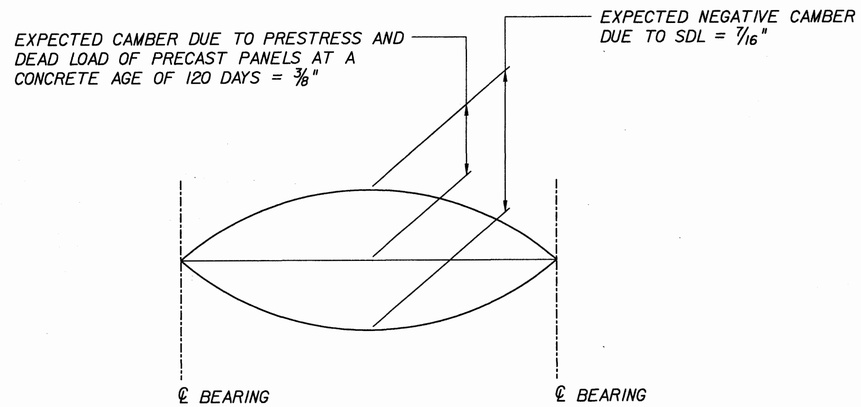

DEFLECTION DIAGRAM

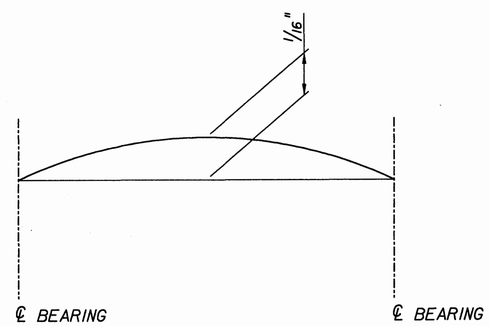

DEAD LOAD CAMBER DIAGRAM

OVERLAY SHALL BE ADJUSTED UPWARD BY THE AMOUNT SHOWN TO COMPENSATE FOR DL & SDL DEFLECTIONS.

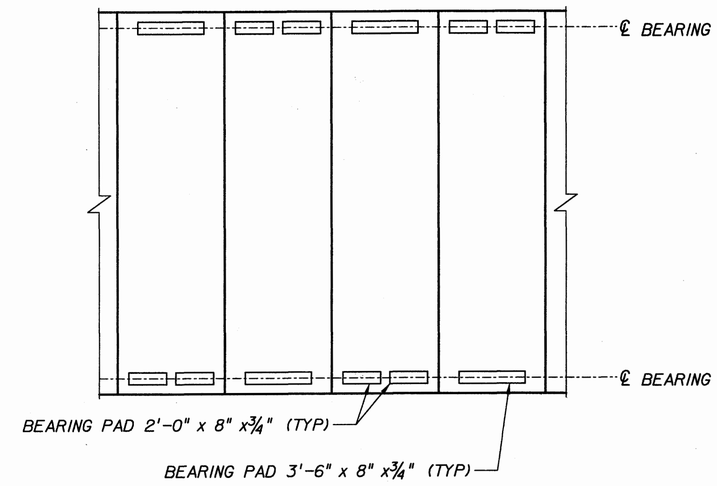

TYPICAL BEARING PAD LAYOUT

BEARING PAD NOTES

1. NEOPRENE IN ALL BEARING PADS SHALL HAVE A GRADE 50 DUROMETER HARDNESS.
2. VARIATIONS IN PAD DIMENSIONS WILL BE ALLOWED PROVIDED REVISED PADS WILL MEET THE CURRENT SPECIFICATIONS AND ARE APPROVED BY THE ENGINEER.
3. BEARING SEAT SHALL BE FINISHED PARALLEL TO THE BOTTOM OF THE PRESTRESSED SLAB UNITS.
4. STEEL SHIM PLATES SHALL CONFORM TO ASTM A36 AND SHALL BE HOT-DIPPED GALVANIZED.

REVISIONS	BY	DATE

SURVEY BOOK No.:		
SURVEY DIVISION	BY	DATE
SURVEYED	---	---
TECHNICIAN	---	---
CHECKED	---	---
DESIGN DIVISION		
DESIGNED	MCM	7/01
DRAWN	JBH	7/01
CHECKED	MCM	7/01

PINELLAS COUNTY, FLORIDA
Public Works

URS
URS CORPORATION SOUTHERN
7650 WEST COURTNEY
CAMPBELL CAUSEWAY
TAMPA, FLORIDA 33607-1462
NO. 00000002

MURRAY C. McDONOUGH FLORIDA REGISTERED PROFESSIONAL ENGINEER No. 43353

2/25/03
DATE

FORT DESOTO
WATER CIRCULATION IMPROVEMENTS

MISCELLANEOUS DETAILS

DATE: FEBRUARY, 2003
PROJECT ID NO.: 921573
SURVEY FILE NO.: N/A
SHEET 28 OF 41
FILE: ...\BMSCDT01.D
VIEW: PLOT

e:\bridges\fort desoto\water circulation improvements\entrance road\bmscdt01.dg

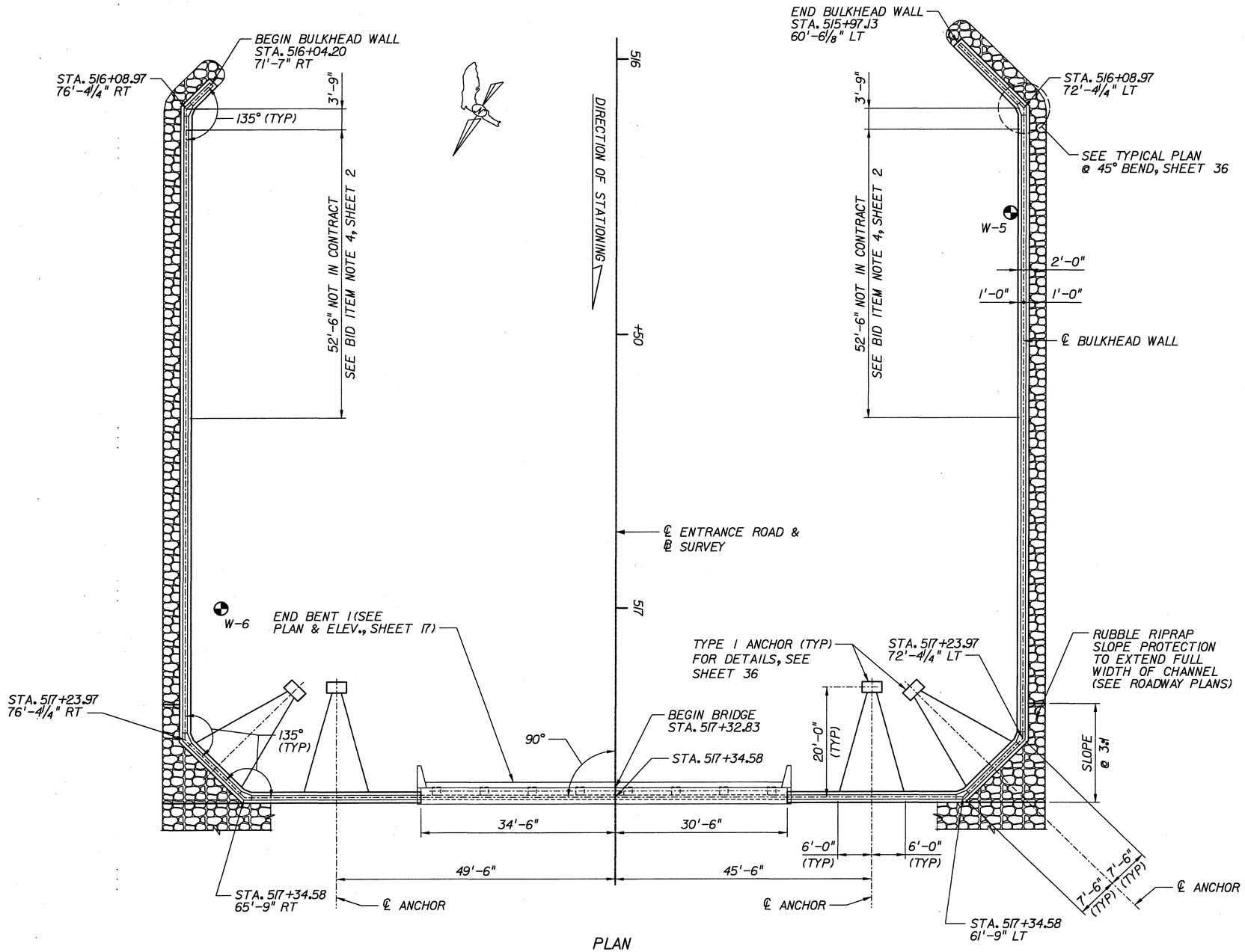

PLAN

NOTES

1. DIMENSIONS SHOWN ARE ALONG ℄ BULKHEAD WALL.
2. GEOTECHNICAL EXPLORATION WAS PERFORMED BY WILLIAMS EARTH SCIENCES, INC. (WES) ON 3/99 AND 7/00. REFER TO GEOTECHNICAL REPORT BY WES DATED AUGUST 7, 2000 FOR DETAILED BORING INFORMATION.

REVISIONS	BY	DATE

SURVEY BOOK No.:		
SURVEY DIVISION	BY	DATE
SURVEYED	---	---
TECHNICIAN	---	---
CHECKED	---	---
DESIGN DIVISION		
DESIGNED	MCM	6/00
DRAWN	DCW	7/00
CHECKED	MCM	6/01

PINELLAS COUNTY, FLORIDA
Public Works

URS
URS CORPORATION SOUTHERN
7650 WEST COURTNEY
CAMPBELL CAUSEWAY
TAMPA, FLORIDA 33607-1462
NO. 00000002

MURRAY C. McDONOUGH FLORIDA REGISTERED PROFESSIONAL ENGINEER No. 43353 — 2/25/03 DATE

FORT DESOTO
WATER CIRCULATION
IMPROVEMENTS

BULKHEAD WALL PLAN AT
END BENT 1
ENTRANCE ROAD BRIDGE

DATE: FEBRUARY, 2003
PROJECT ID NO.: 921573
SURVEY FILE NO.: N/A
SHEET 29 OF 41
FILE: ..\BBHDB101.D
VIEW: PLOT

e:\bridges\fort desoto\water circulation improvements\entrance road\bbhdb101.dg

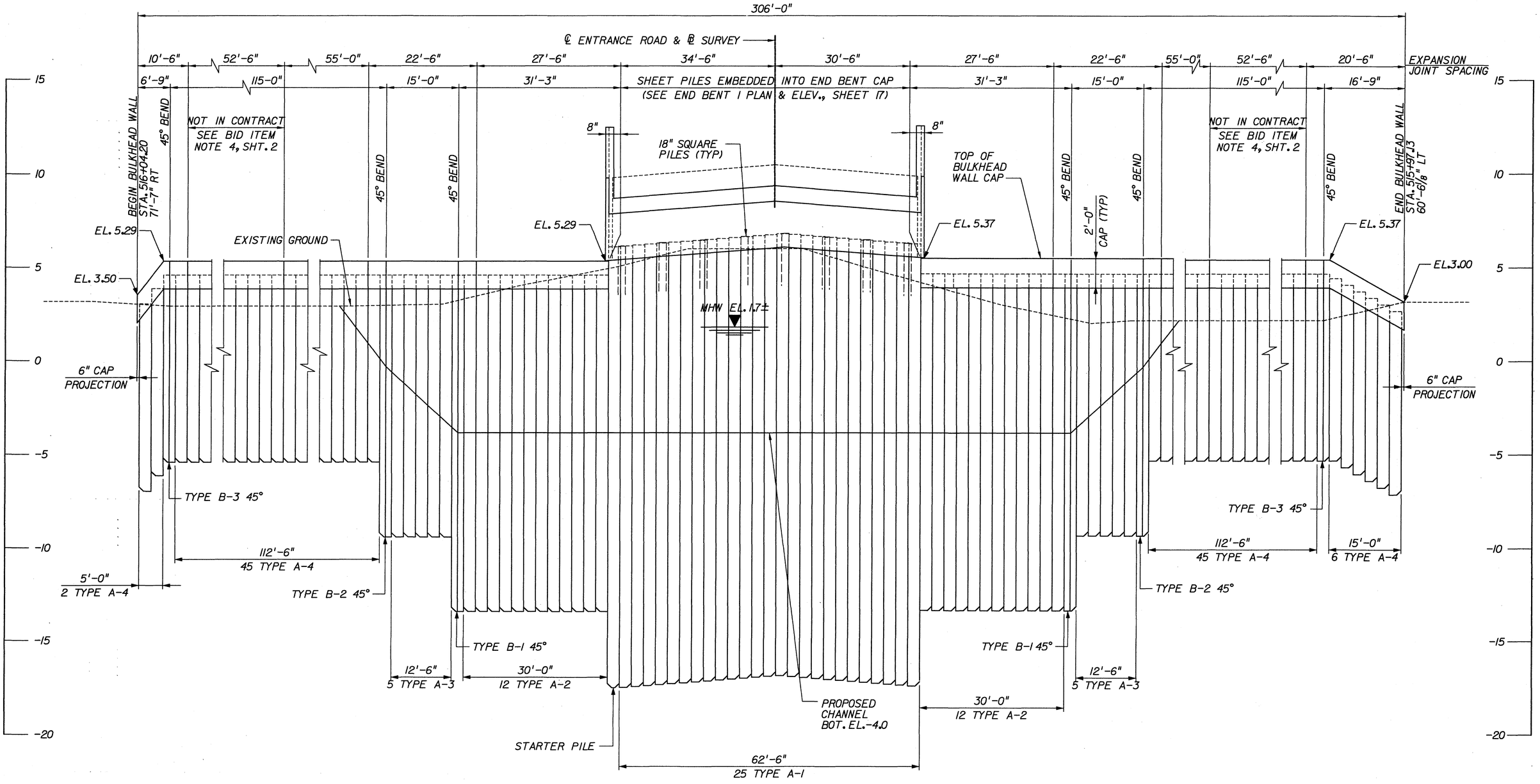

UNFOLDED ELEVATION

(LOOKING STATIONS BACK)

NOTES

1. DIMENSIONS AND ELEVATIONS SHOWN ARE ALONG ℄ BULKHEAD WALL.

REVISIONS	BY	DATE

SURVEY BOOK No.:		
SURVEY DIVISION	BY	DATE
SURVEYED	---	---
TECHNICIAN	---	---
CHECKED	---	---
DESIGN DIVISION		
DESIGNED	MCM	6/00
DRAWN	DCW	7/00
CHECKED	MCM	6/01

PINELLAS COUNTY, FLORIDA
Public Works

URS
URS CORPORATION SOUTHERN
7650 WEST COURTNEY CAMPBELL CAUSEWAY
TAMPA, FLORIDA 33607-1462
NO. 00000002

MURRAY C. McDONOUGH FLORIDA REGISTERED PROFESSIONAL ENGINEER No. 43353

2/05/03
DATE

FORT DESOTO
WATER CIRCULATION IMPROVEMENTS

BULKHEAD WALL ELEVATION AT END BENT 1
ENTRANCE ROAD BRIDGE

DATE: FEBRUARY, 2003
PROJECT ID NO.: 921573
SURVEY FILE NO.: N/A
SHEET 30 OF 41
FILE: ...\BBHDB102.D
VIEW: PLOT

e:\bridges\fort desoto\water circulation improvements\entrance road\bbhdb102.dg

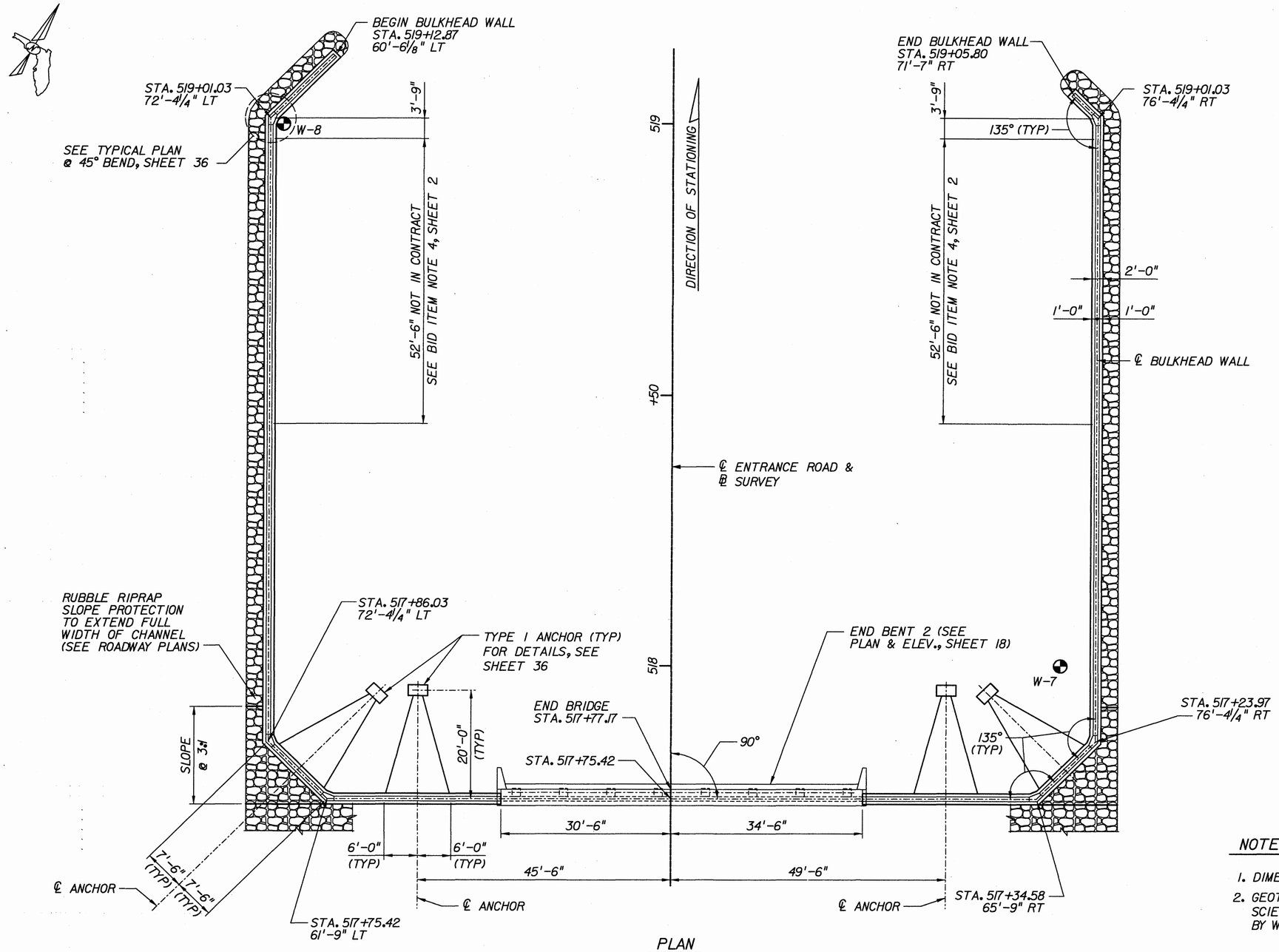

PLAN

NOTES

1. DIMENSIONS SHOWN ARE ALONG ℄ BULKHEAD WALL.
2. GEOTECHNICAL EXPLORATION WAS PERFORMED BY WILLIAMS EARTH SCIENCES, INC. (WES) ON 3/99 AND 7/00. REFER TO GEOTECHNICAL REPORT BY WES DATED AUGUST 7, 2000 FOR DETAILED BORING INFORMATION.

REVISIONS	BY	DATE

SURVEY BOOK No.:		
SURVEY DIVISION	BY	DATE
SURVEYED	---	---
TECHNICIAN	---	---
CHECKED	---	---
DESIGN DIVISION		
DESIGNED	MCM	6/00
DRAWN	DCW	7/00
CHECKED	MCM	6/01

PINELLAS COUNTY, FLORIDA
Public Works

URS
URS CORPORATION SOUTHERN
7650 WEST COURTNEY
CAMPBELL CAUSEWAY
TAMPA, FLORIDA 33607-1462
NO. 00000002

MURRAY C. McDONOUGH FLORIDA REGISTERED PROFESSIONAL ENGINEER No. 43353

2/25/03
DATE

FORT DESOTO
WATER CIRCULATION
IMPROVEMENTS

BULKHEAD WALL PLAN AT
END BENT 2
ENTRANCE ROAD BRIDGE

DATE: FEBRUARY, 2003
PROJECT ID NO.: 921573
SURVEY FILE NO.: N/A
SHEET 31 OF 41
FILE: ...\BBHDB103.D
VIEW: PLOT

e:\bridges\fort desoto\water circulation improvements\entrance road\bbhdb103.dg

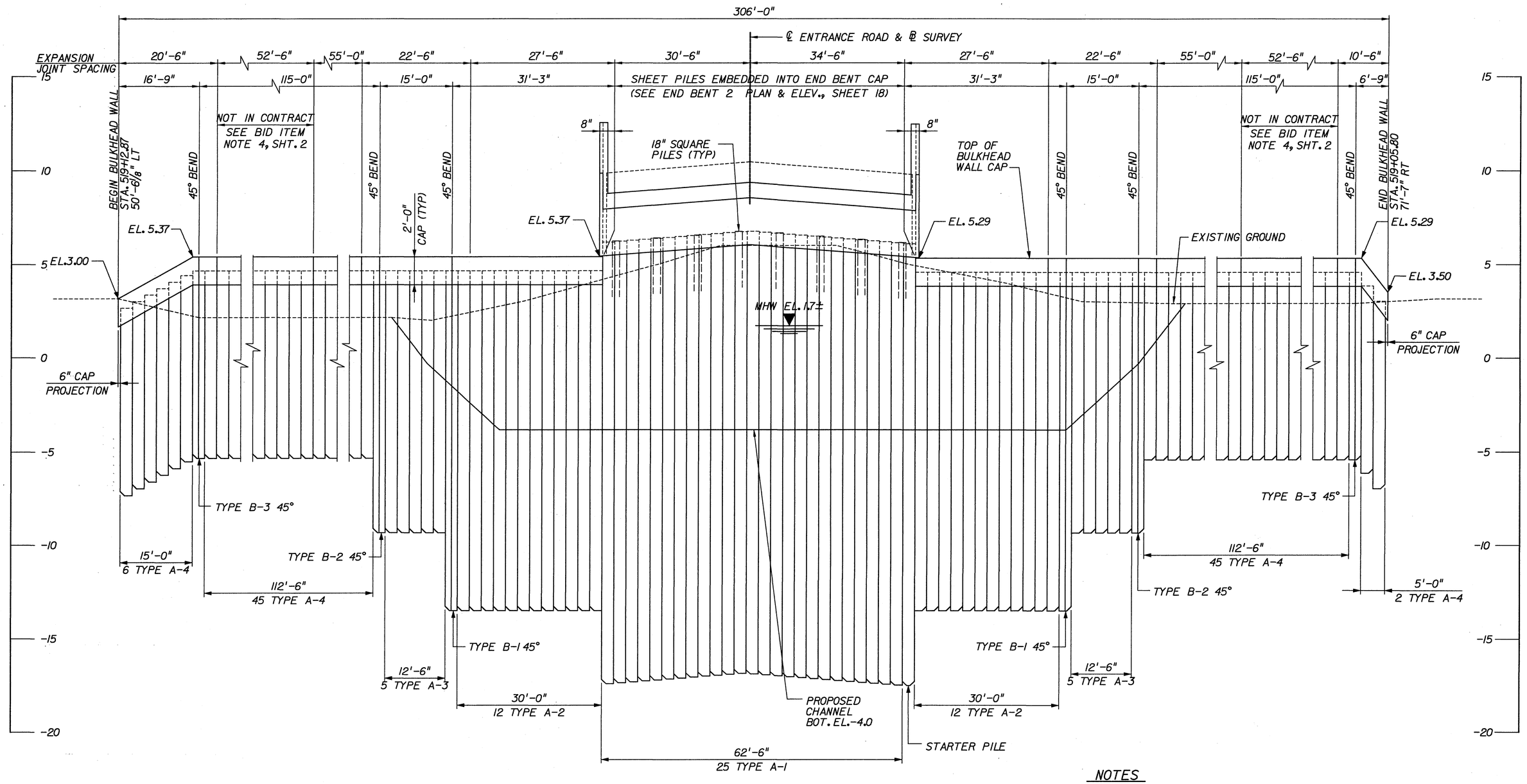

UNFOLDED ELEVATION
(LOOKING STATIONS AHEAD)

NOTES

1. DIMENSIONS AND ELEVATIONS SHOWN ARE ALONG ℄ BULKHEAD WALL.

REVISIONS	BY	DATE

SURVEY BOOK No.:		
SURVEY DIVISION	BY	DATE
SURVEYED	---	---
TECHNICIAN	---	---
CHECKED	---	---
DESIGN DIVISION		
DESIGNED	MCM	6/00
DRAWN	DCW	7/00
CHECKED	MCM	6/01

PINELLAS COUNTY, FLORIDA
Public Works

URS
URS CORPORATION SOUTHERN
7650 WEST COURTNEY
CAMPBELL CAUSEWAY
TAMPA, FLORIDA 33607-1462
NO. 00000002

MURRAY C. McDONOUGH FLORIDA REGISTERED PROFESSIONAL ENGINEER No. 43353

2/28/03
DATE

FORT DESOTO
WATER CIRCULATION
IMPROVEMENTS

BULKHEAD WALL ELEVATION AT
END BENT 2
ENTRANCE ROAD BRIDGE

DATE: FEBRUARY, 2003
PROJECT ID NO.: 921573
SURVEY FILE NO.: N/A
SHEET 32 OF 41
FILE: ..\BBHDB104.D
VIEW: PLOT

e:\bridges\fort desoto\water circulation improvements\entrance road\bbhdb104.dg

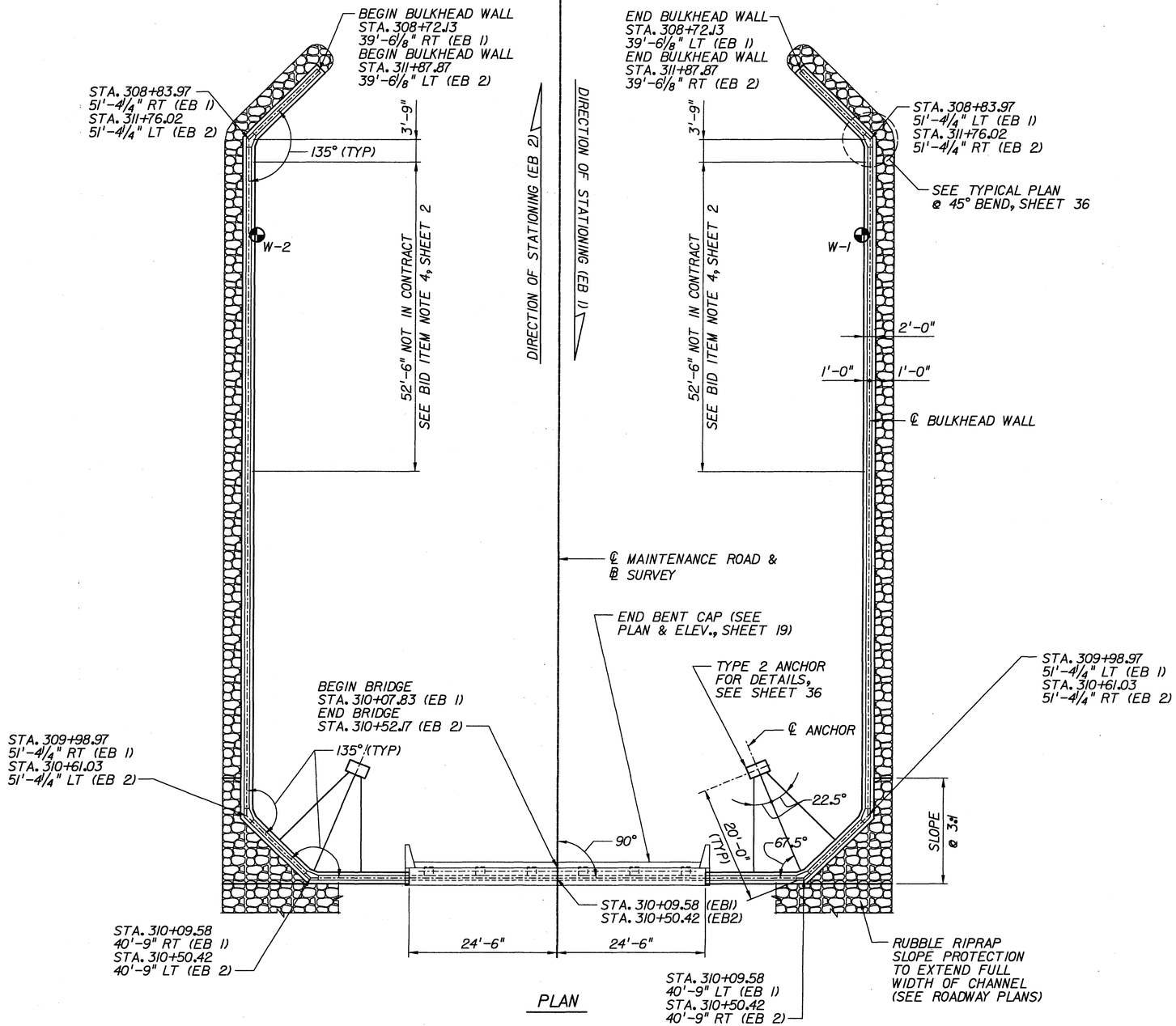

PLAN

NOTES

1. DIMENSIONS SHOWN ARE ALONG ℄ BULKHEAD WALL.
2. GEOTECHNICAL EXPLORATION WAS PERFORMED BY WILLIAMS EARTH SCIENCES, INC. (WES) ON 3/99 AND 7/00. REFER TO GEOTECHNICAL REPORT BY WES DATED AUGUST 7, 2000 FOR DETAILED BORING INFORMATION.

REVISIONS	BY	DATE

SURVEY BOOK No.:		
SURVEY DIVISION	BY	DATE
SURVEYED	---	---
TECHNICIAN	---	---
CHECKED	---	---
DESIGN DIVISION		
DESIGNED	MCM	6/00
DRAWN	DCW	7/00
CHECKED	MCM	6/01

PINELLAS COUNTY, FLORIDA
Public Works

URS
URS CORPORATION SOUTHERN
7440 WEST COURTNEY
CAMPBELL CAUSEWAY
TAMPA, FLORIDA 33607-1462
NO. 00000002

MURRAY C. McDONOUGH FLORIDA REGISTERED PROFESSIONAL ENGINEER No. 43353

2/25/03
DATE

FORT DESOTO
WATER CIRCULATION
IMPROVEMENTS

BULKHEAD WALL PLAN AT
END BENTS
MAINTENANCE ROAD BRIDGE

DATE: FEBRUARY, 2003
PROJECT ID NO.: 921573
SURVEY FILE NO.: N/A
SHEET 33 OF 41
FILE: ...\BBHDB201.D
VIEW: PLOT

e:\bridges\fort desoto\water circulation improvements\maintenance road\bbhdb201.dg

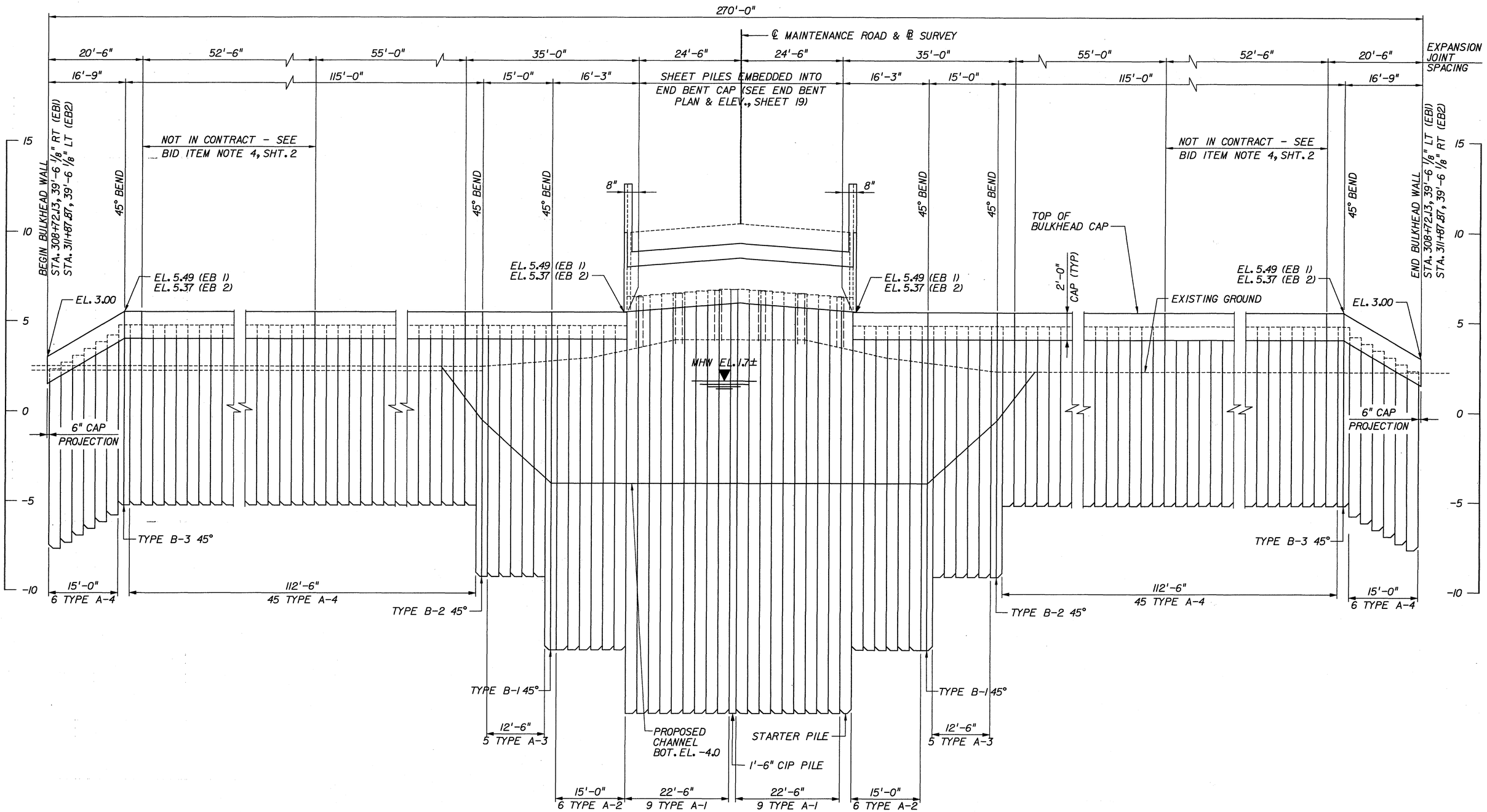

UNFOLDED ELEVATION

(LOOKING STATIONS BACK EB-1, LOOKING STATIONS AHEAD EB-2)

REVISIONS	BY	DATE

SURVEY BOOK No.:		
SURVEY DIVISION	BY	DATE
SURVEYED	---	---
TECHNICIAN	---	---
CHECKED	---	---
DESIGN DIVISION		
DESIGNED	MCM	6/00
DRAWN	DCW	7/00
CHECKED	MCM	6/01

PINELLAS COUNTY, FLORIDA
Public Works

URS
URS CORPORATION SOUTHERN
7440 WEST COURTNEY CAMPBELL CAUSEWAY
TAMPA, FLORIDA 33607-1462
NO. 00000002

MURRAY C. McDONOUGH FLORIDA REGISTERED PROFESSIONAL ENGINEER No. 43353

2/25/03
DATE

FORT DESOTO
WATER CIRCULATION IMPROVEMENTS

BULKHEAD WALL ELEVATION AT END BENTS
MAINTENANCE ROAD BRIDGE

DATE: FEBRUARY, 2003
PROJECT ID NO.: 921573
SURVEY FILE NO.: N/A
SHEET 34 OF 41
FILE: ...\BBHDB202.D
VIEW: PLOT

e:\bridges\fort desoto\water circulation improvements\maintenance road\bbhdb202.dg

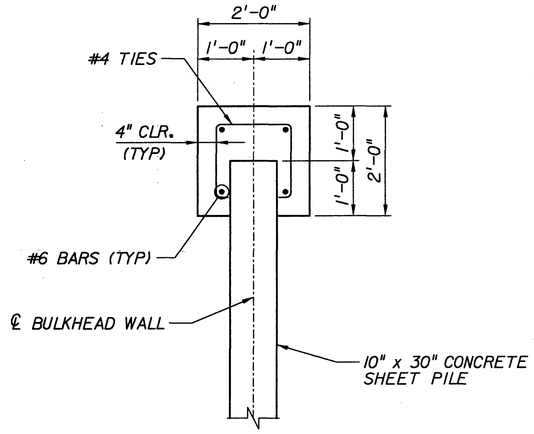

TYPICAL CAP SECTION

NOTE: MINIMUM LAP SPLICE FOR NO. 4 BARS = 2'-0"
MINIMUM LAP SPLICE FOR NO. 6 BARS = 2'-11"

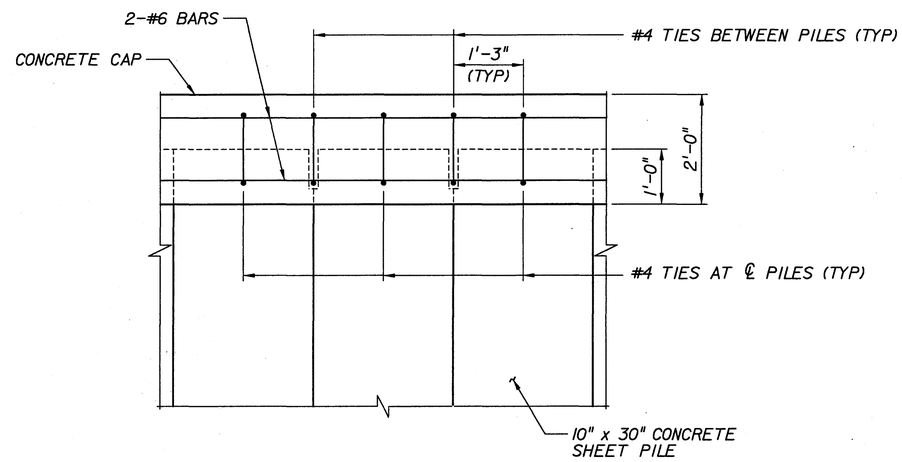

TYPICAL CAP ELEVATION

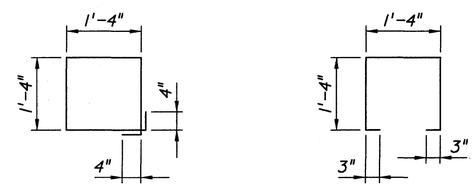

TIE BETWEEN PILES TIE AT ℄ PILES

TIE DETAILS

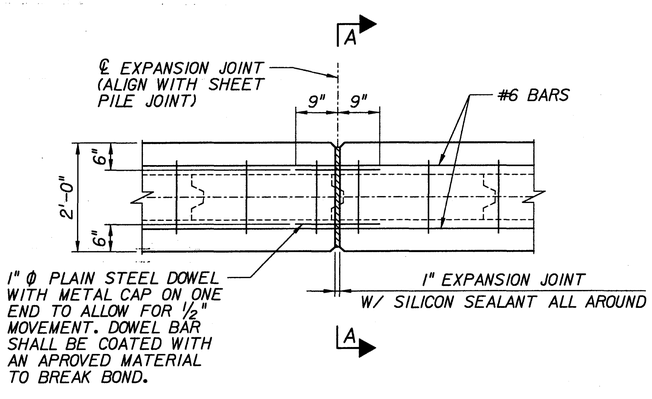

TYPICAL EXPANSION JOINT

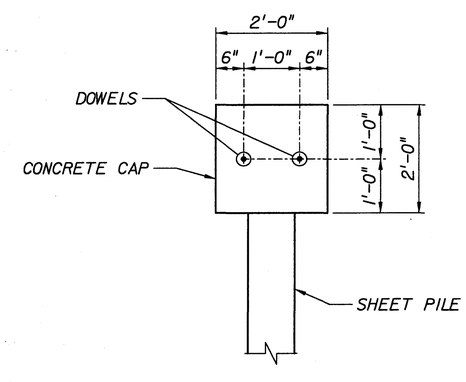

SECTION A-A

NOTES

1. CONTRACTOR SHALL MAINTAIN THE INTEGRITY OF THE BULKHEAD WALL UNTIL THE FILL IS IN PLACE,
2. FOR SUMMARY OF ESTIMATED BULKHEAD WALL QUANTITIES, SEE TABLE BELOW.
3. BULKHEAD WALLS SHALL BE CONSTRUCTED PRIOR TO CHANNEL EXCAVATION.
4. ELEVATIONS ARE PROJECTED ALONG ℄ CAP.
5. ALL REINFORCING STEEL SHALL HAVE 4" CLEAR COVER, UNLESS NOTED OTHERWISE.
6. FOR ADDITIONAL NOTES, SEE GENERAL NOTES SHEET 2.
7. FOR BULKHEAD WALL PLAN & ELEVATION, SEE SHEETS 29 THRU 34.
8. FOR ANCHOR DETAILS, SEE SHEET 36.

BULKHEAD WALL AT ENTRANCE ROAD BRIDGE
ESTIMATED CONCRETE SHEET PILE QUANTITIES

TYPE	NO. OF PILES	LIN. FT.
TYPICAL PILE	230	3459
STARTER PILE	10	160
CORNER PILES	12	168

BULKHEAD WALL AT ENTRANCE ROAD BRIDGE
ESTIMATED CONCRETE AND STEEL QUANTITIES

ITEM	UNIT	QUANTITY
*** CLASS IV CONCRETE (BULKHEAD)	CY.	61.73
* REINFORCING STEEL (BULKHEAD)	LBS.	4762
* ANCHOR BAR STEEL	EACH	16

BULKHEAD WALL AT MAINTENANCE ROAD BRIDGE
ESTIMATED CONCRETE SHEET PILE QUANTITIES

TYPE	NO. OF PILES	LIN. FT.
TYPICAL PILE	200	2771
STARTER PILE	6	104
CORNER PILES	12	168

BULKHEAD WALL AT MAINTENANCE ROAD BRIDGE
ESTIMATED CONCRETE AND STEEL QUANTITIES

ITEM	UNIT	QUANTITY
*** CLASS IV CONCRETE (BULKHEAD)	CY.	55.13
* REINFORCING STEEL (BULKHEAD)	LBS.	4182
* ANCHOR BAR STEEL	EACH	12

* SHOWN AS BULKHEAD IN SUMMARY OF QUANTITIES, SHEET (DOES NOT INCLUDE SPLICE LAPS, BUT INCLUDES DEADMAN REINFORCING STEEL).

** THE COST OF ANCHOR BAR SHALL INCLUDE THE COST OF COAL TAR PROTECTIVE COATING.

*** INCLUDES CONCRETE FOR DEADMEN. SHOWN AS BULKHEAD CONCRETE, ITEM 400-4-8, SEE SHEET 2.

REVISIONS	BY	DATE

SURVEY BOOK No.:		
SURVEY DIVISION	BY	DATE
SURVEYED	---	---
TECHNICIAN	---	---
CHECKED	---	---
DESIGN DIVISION		
DESIGNED	MCM	7/01
DRAWN	JBH	7/01
CHECKED	MCM	7/01

PINELLAS COUNTY, FLORIDA
Public Works

URS CORPORATION SOUTHERN
7650 WEST COURTNEY
CAMPBELL CAUSEWAY
TAMPA, FLORIDA 33607-1462
NO. 00000002

MURRAY C. McDONOUGH FLORIDA REGISTERED PROFESSIONAL ENGINEER No. 43353

2/25/03
DATE

FORT DESOTO
WATER CIRCULATION
IMPROVEMENTS

BULKHEAD WALL DETAILS (1)

DATE: FEBRUARY, 2003
PROJECT ID NO.: 921573
SURVEY FILE NO.: N/A
SHEET 35 OF 41
FILE...\BBHDB105.D
VIEW: PLOT

e:\bridges\fort desoto\water circulation improvements\entrance road\bbhdb105.dg

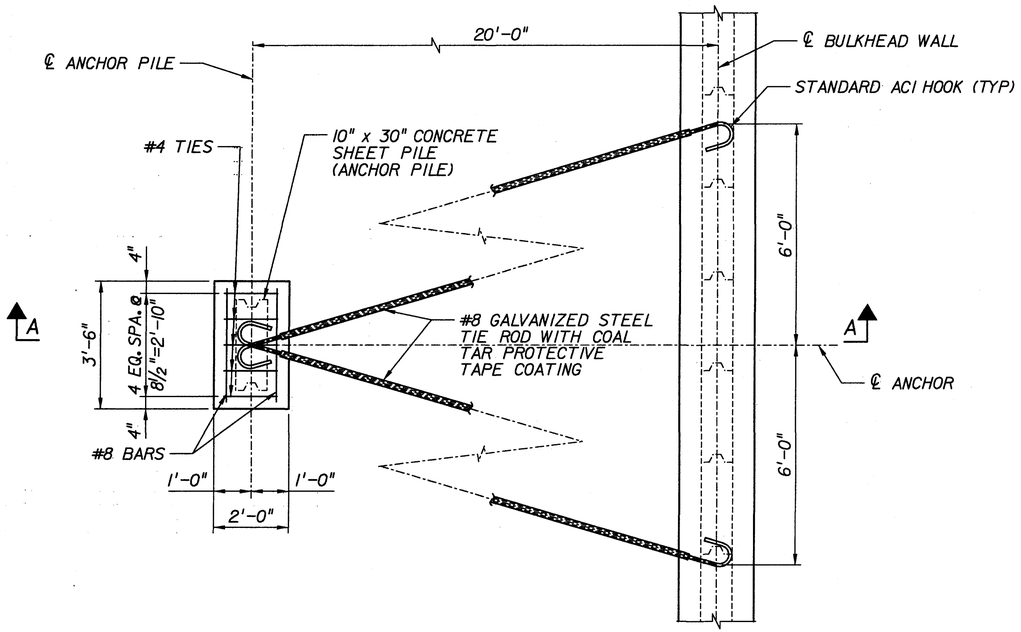

TYPE 1 ANCHOR PLAN

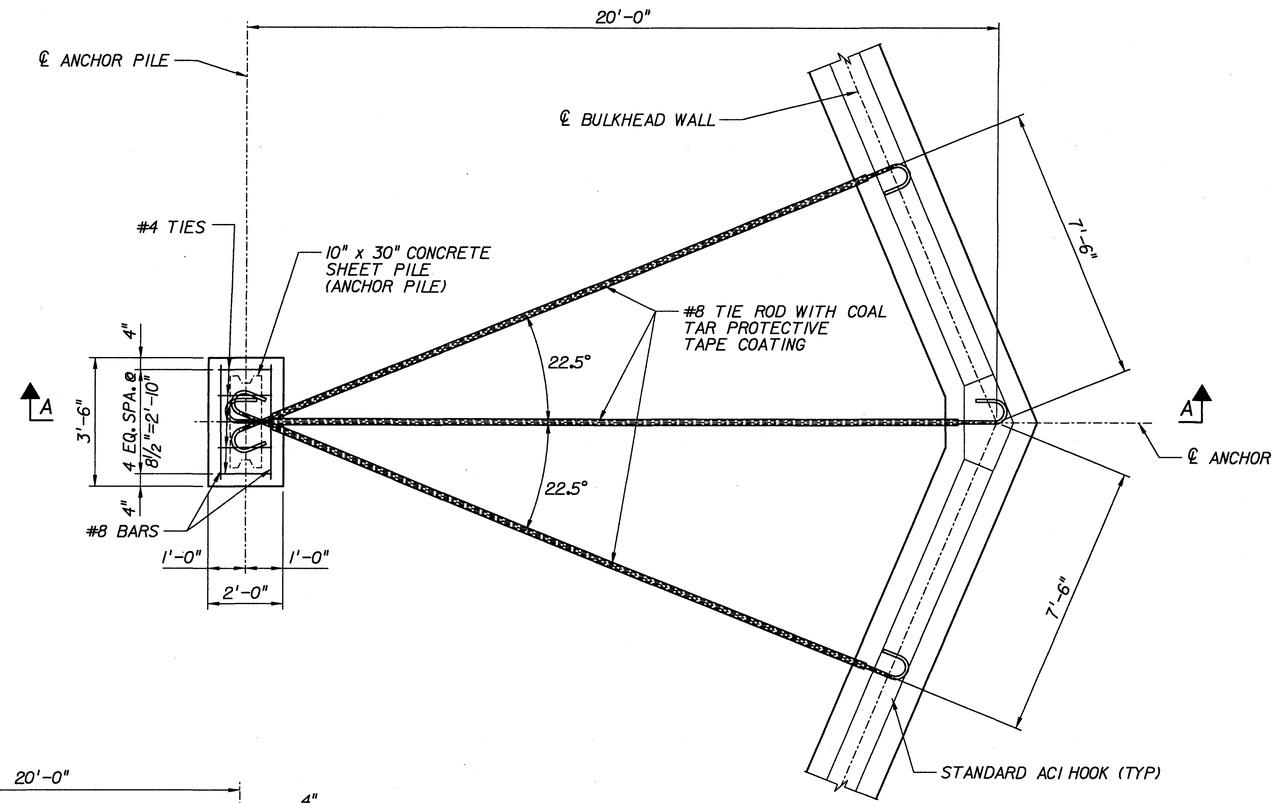

TYPE 2 ANCHOR PLAN

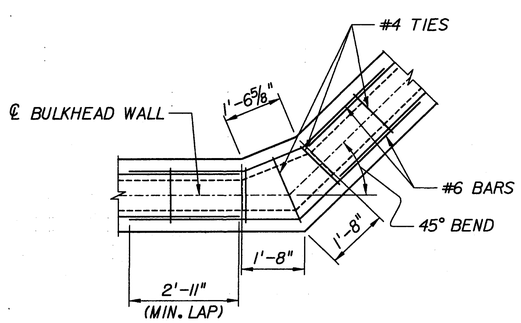

TYPICAL PLAN
45° BEND

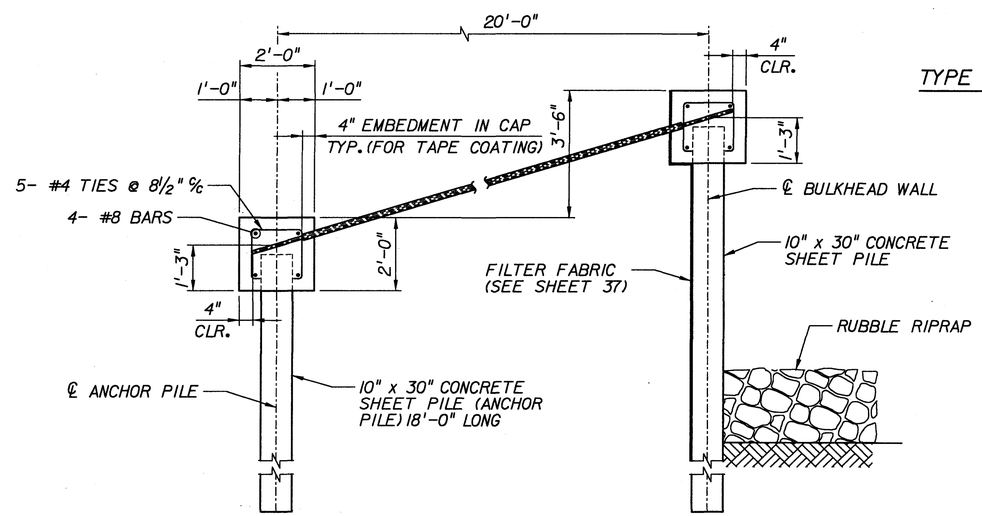

SECTION A-A

NOTES

1. CONTRACTOR SHALL FIELD MEASURE LOCATION OF SHEET PILES AFTER INSTALLATION PRIOR TO FABRICATING ANCHOR BARS TO ENSURE PROPER FIT.

REVISIONS	BY	DATE

SURVEY BOOK No.:		
SURVEY DIVISION	BY	DATE
SURVEYED	---	---
TECHNICIAN	---	---
CHECKED	---	---
DESIGN DIVISION		
DESIGNED	MCM	7/01
DRAWN	JBH	7/01
CHECKED	MCM	7/01

PINELLAS COUNTY, FLORIDA
Public Works

URS
URS CORPORATION SOUTHERN
7650 WEST COURTNEY CAMPBELL CAUSEWAY
TAMPA, FLORIDA 33607-1462
NO. 00000002

MURRAY C. McDONOUGH FLORIDA REGISTERED PROFESSIONAL ENGINEER No. 43353

2/25/03
DATE

FORT DESOTO
WATER CIRCULATION IMPROVEMENTS

BULKHEAD WALL DETAILS (2)

DATE: FEBRUARY, 2003
PROJECT ID NO.: 921573
SURVEY FILE NO.: N/A
SHEET 36 OF 41
FILE: ..\BBHDB106.D
VIEW: PLOT

e:\bridges\fort desoto\water circulation improvements\entrance road\bbhdb106.dg

SHEET PILE DATA

TYPE (See Detail A)	NUMBER REQUIRED	L (Ft.)	T (In.)	X (Ft.)	ϕ (Degrees)
A-1	86	23.8	N/A	12.0	N/A
A-2	72	18.1	N/A	10.0	N/A
A-3	40	14.0	N/A	8.0	N/A
A-4	232	10.0	N/A	4.0	N/A
B-1	8	18.1	10.0	10.0	45
B-2	8	14.0	10.0	8.0	45
B-3	8	10.0	10.0	4.0	45
STARTER	4	23.8	N/A	12.0	N/A
ANCHOR	12	14.0	N/A	---	N/A

Note: The tip elevation of Concrete Sheet Piles shall be determined by the Geotechnical Engineer.

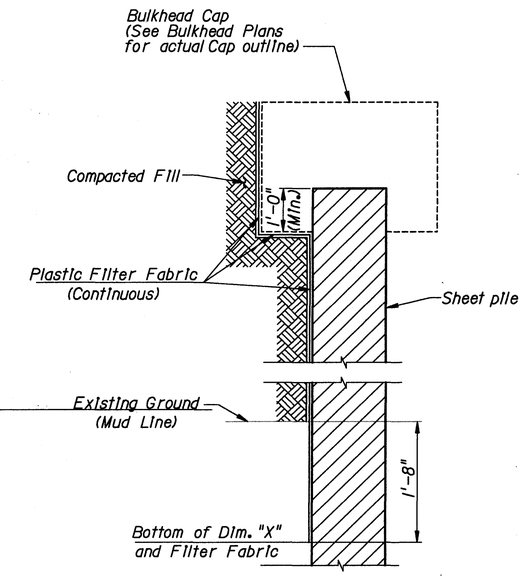

SECTION THRU BULKHEAD
(Showing Plastic Filter Fabric)

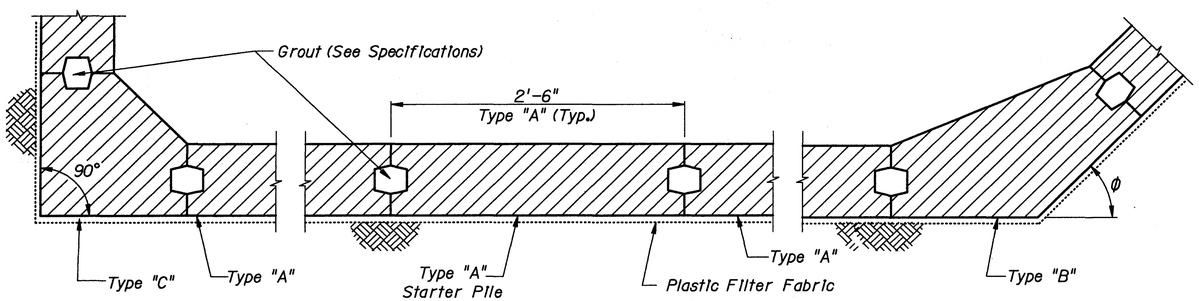

DETAIL "A"
(Cap and Anchoring System Not Shown)
(Section Taken Above Dimension "X")

NOTE: Detail "A" shows a Part-Plan View of an assumed bulkhead. See Bulkhead plans for actual Plan View.

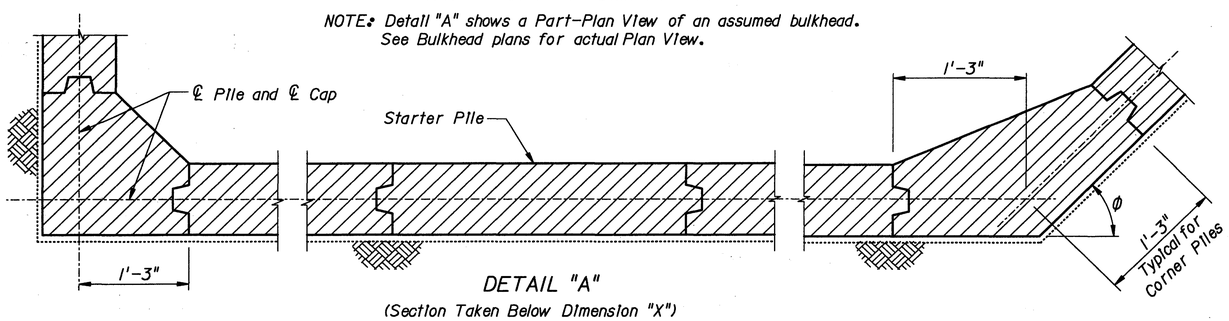

DETAIL "A"
(Section Taken Below Dimension "X")

SHEET PILE DESIGN CRITERIA AND NOTES

DESCRIPTION:

Standard drawings Indices Nos. 660 through 690 include details for three types of piles with two thicknesses. Types "B" and "C" piles (corner piles) are of reinforced concrete construction, and Type "A" is of prestressed concrete construction. The piles shall be manufactured, cured and installed in accordance with the requirements of the contract documents.

NOTE: Index No. 680 and/or 690 are included if Type "B" and/or "C" piles are required.

DESIGN SPECIFICATIONS:

Florida Department of Transportation (FDOT) "Structures Design Guidelines, 1998 edition, including revisions thru January 1, 1999.

The Florida Department of Transportation "Standard Specifications for Road and Bridge Construction", current edition.

American Association of State Highway and Transportation Officials (AASHTO) Standard Specification for Highway Bridges, 1996 edition with interims thru 1998.

If a conflict exists between the design specifications the FDOT "Structures Design Guidelines for Load and Resistance Factor Design" and the FDOT "Standard Specifications for Road and Bridge Construction" will govern.

MATERIALS: (for materials not listed refer to the design specifications)

CONCRETE
- Class: V (Special w/ microsilica)
- Strength: 4,000 psi minimum at time of release
- Unit weight: 150 pcf
- Modulus of Elasticity: Based on the use of Florida limerock concrete

REINFORCING STEEL
- Grade: 60,000 psi ASTM A615-96

PRESTRESSING STEEL
- Grade: 270,000 psi (as noted)

DESIGN PARAMETERS: (refer to the design specifications unless noted herein.)
Rectangular Prestressed Concrete Section: Minimum 1,000 psi uniform compression after prestressing losses
Pick-up, Storage, and Transportation: 1.5 times pile self weight

ENVIRONMENT:
The pile designs are applicable to all Environments.

PLASTIC FILTER FABRIC:
The plastic filter fabric shall extend to the bottom of the "X" dimension.

PILE PICK-UP AND HANDLING:
Pick-up of pile may be either a single point pick-up using the pick-up bar, or a two point pick-up as shown below.

PILE FIT-UP:
The 2'-6" Sheet Pile dimension is nominal. This dimension may be shortened by the Manufacturer up to ½" to allow for Sheet Pile fit-up in its final position. Minimum Sheet Pile width is 2'-5½". No changes shall be made to the tongues or grooves.

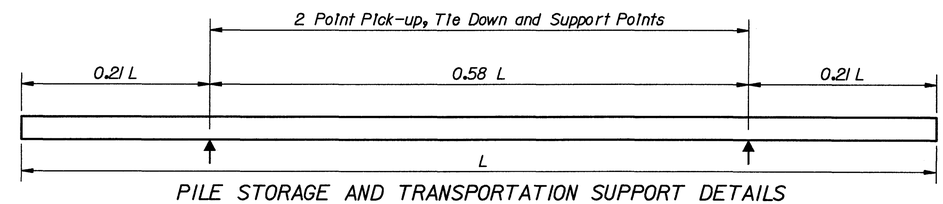

PILE STORAGE AND TRANSPORTATION SUPPORT DETAILS

REVISIONS	BY	DATE

SURVEY BOOK No.:		
SURVEY DIVISION	BY	DATE
SURVEYED	---	---
TECHNICIAN	---	---
CHECKED	---	---
DESIGN DIVISION		
DESIGNED	MCM	7/01
DRAWN	JBH	7/01
CHECKED	MCM	7/01

PINELLAS COUNTY, FLORIDA
Public Works

LAND SURVEY DIVISION
22211 U.S. HWY. 19 NORTH
CLEARWATER, FLORIDA 33765-2347
PHONE (727) 464-8904

ENGINEERING DEPARTMENT
440 COURT STREET
CLEARWATER, FLORIDA 33756-5136
PHONE (727) 464-3201

MURRAY C. McDONOUGH FLORIDA REGISTERED PROFESSIONAL ENGINEER No. 43353 — DATE 2/25/03

FORT DESOTO
WATER CIRCULATION IMPROVEMENTS

PRECAST CONCRETE SHEET PILES
INDEX NO. S-650

DATE: FEBRUARY, 2003
PROJECT ID NO.: 921573
SURVEY FILE NO.: N/A
SHEET 37 OF 42
FILE: ...\S-650WC1.D
VIEW: PLOT

e:\bridges\fort desoto\water circulation improvements\fdotstds\s-650wc1.dg

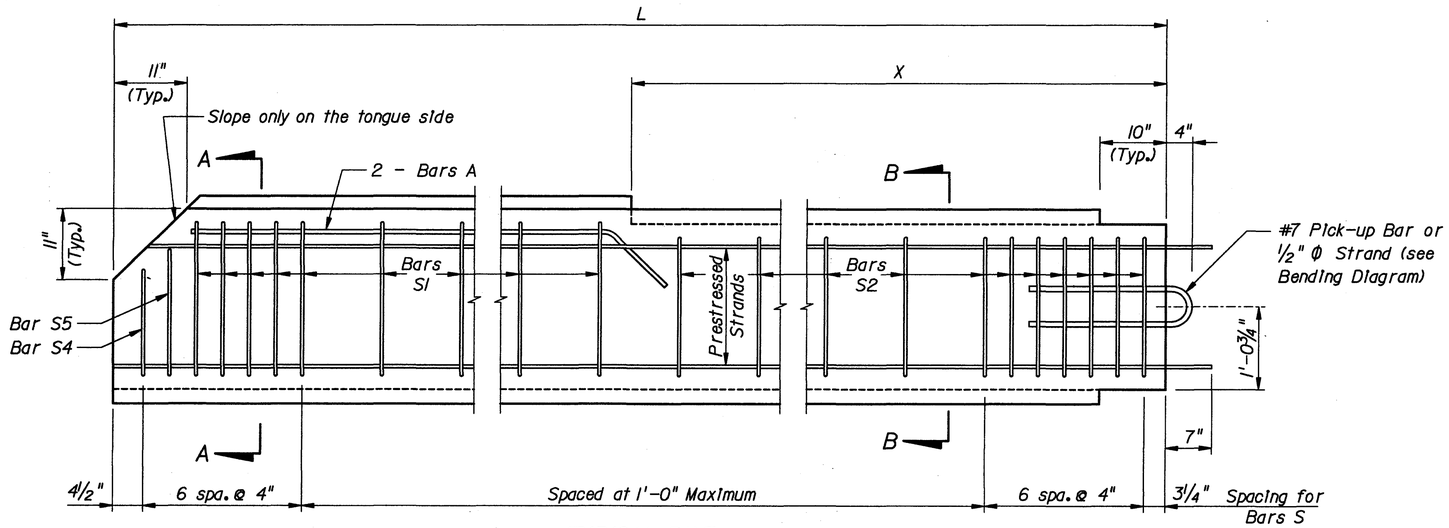

TYPICAL PILE

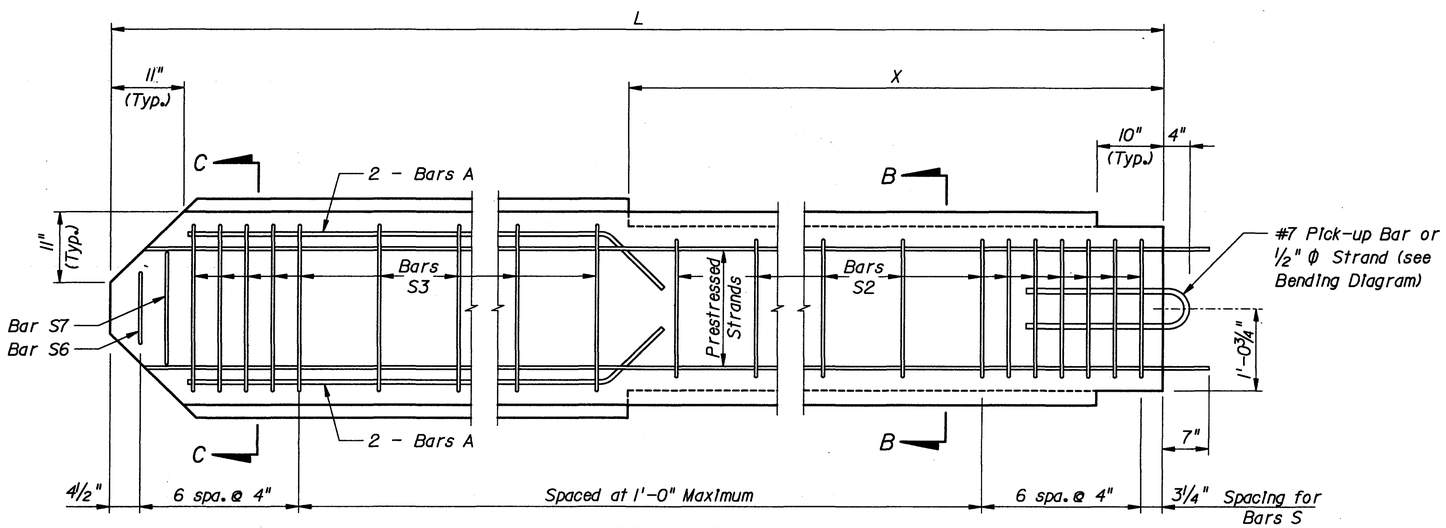

STARTER PILE

STRAND DIA. (In)	MAXIMUM L	n	D (In)	TOTAL # OF STRANDS	SECTION MODULUS (In^3)	* STRESS (PSI)
0.5	28'-0"	6	3 1/4	14	500	1150
0.6	27'-0"	4	5	10	500	1160

* Unit Prestress after losses.

BAR BENDING DIAGRAMS

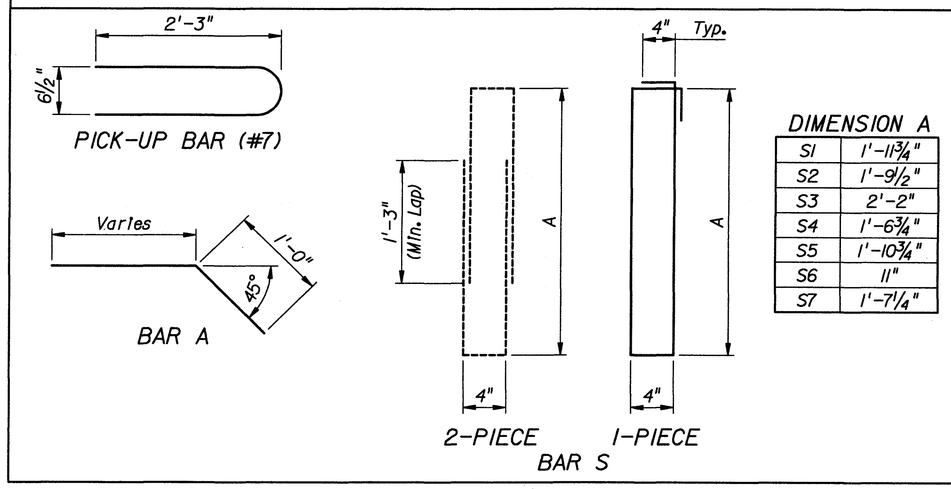

DIMENSION A	
S1	1'-11 3/4"
S2	1'-9 1/2"
S3	2'-2"
S4	1'-6 3/4"
S5	1'-10 3/4"
S6	11"
S7	1'-7 1/4"

NOTES:

1. Work this Standard with Index No. S-650.
2. Intermediate Prestress Strands not shown in Elevations and Sections.
3. All bar dimensions are out-to-out.
4. Bars A are #5 and Bars S are #4.
5. At the Contractor's option Bars S may be fabricated as a two piece bar as shown in the Bar Bending Diagram.
6. The Contractor may use Welded Deformed Wire Fabric conforming to specification ASTM A497 in lieu of Bars A and Bars S if the wire size and spacing provide the same area of reinforcing steel per foot as the Bars shown.

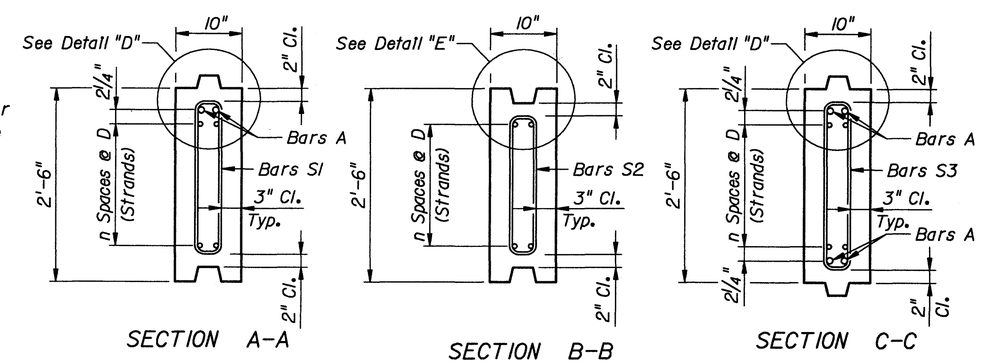

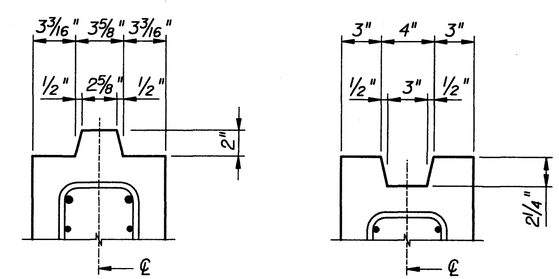

DETAIL "D" (Typical Tongue)

DETAIL "E" (Typical Groove)

REVISIONS					
DATE	BY	DESCRIPTION	DATE	BY	DESCRIPTION

	NAMES	DATES
DRAWN BY	KFS	4-00
CHECKED BY	JRA	4-00
DESIGNED BY	JRA	4-00
CHECKED BY	KFS	4-00
APPROVED BY	RDS	

ENGINEER OF RECORD:
STRUCTURES DESIGN OFFICE
CENTRAL OFFICE
605 Suwannee Street, MS 33
Tallahassee, Florida 32399-0450

FLORIDA DEPARTMENT OF TRANSPORTATION

ROAD NO.	COUNTY	FINANCIAL PROJECT ID

SHEET TITLE: PRECAST CONCRETE SHEET PILES TYPE "A" - 10 INCH THICK - INDEX NO. 660

PROJECT NAME: FORT DESOTO WATER CIRCULATION IMPROVEMENTS

SHEET NO. 38

F:\BRIDGES\FORT DESOTO\WATER CIRCULATION IMPROVEMENTS\FDOTSTDS\660WCI.DGN

02/25/03 3:21:26 PM

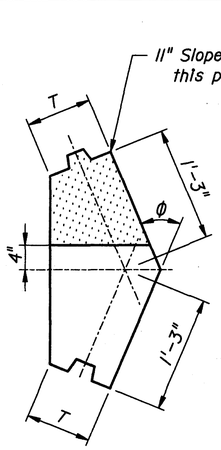

VIEW C-C

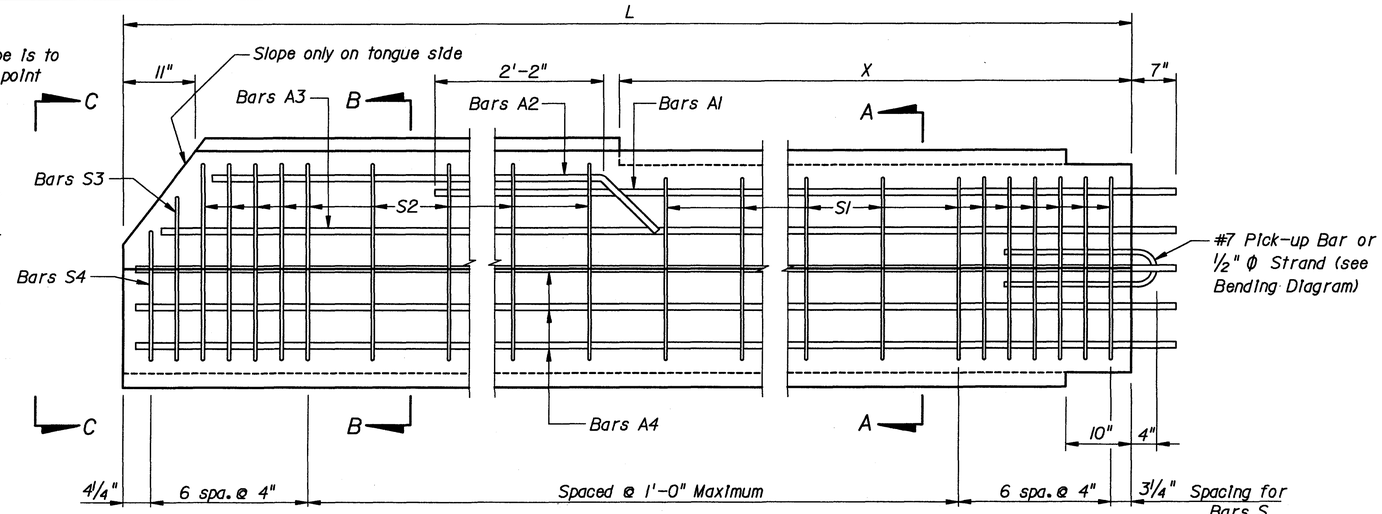

ELEVATION
(TYPE "B" PILE)

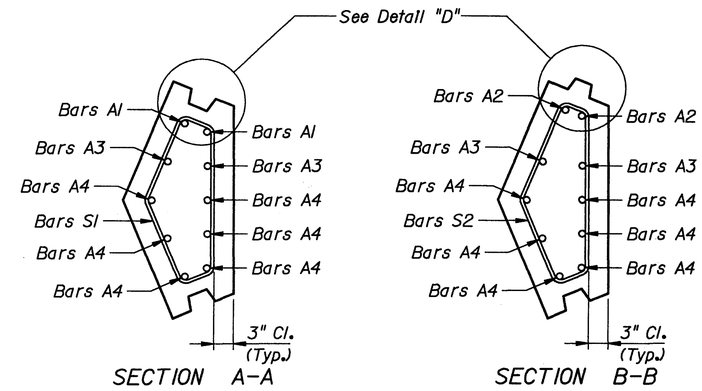

SECTION A-A

SECTION B-B

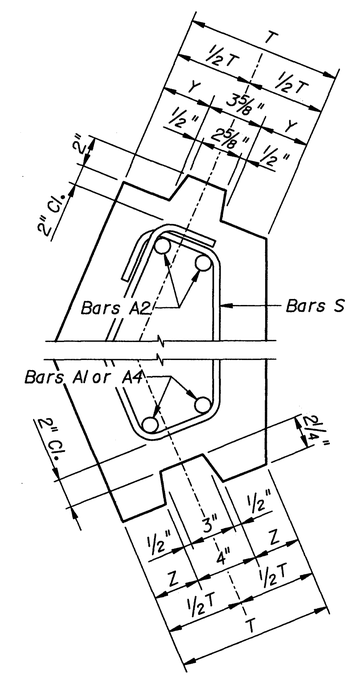

DETAIL D

SHEET PILE DIMENSIONS		
T (In)	10	12
Y (In)	3 3/16	4 3/16
Z (In)	3	4

BAR BENDING DIAGRAMS

STIRRUP DIMENSIONS (T = 10")

φ	BAR MARK	R1	R2	R3	R4	R5	R6	R7	R8
30°	S1	11 1/4"	9 3/4"	1'-6 1/2"	2 1/2"	5"	4 3/4"	5 1/2"	4 1/4"
	S2	1'-1 1/2"	9 3/4"	1'-8 3/4"	2 1/2"	4 1/2"	5 1/2"	5 3/4"	4 1/4"
	S3	11 1/4"	8"	1'-6"	1 1/4"	5"	4 1/2"	4 1/2"	5"
	S4	11 1/4"	4 1/4"	1'-1 3/4"	1 3/4"	5"	3 3/4"	2 1/2"	6 1/4"
45°	S1	11 1/2"	8"	1'-4"	4"	5 1/2"	6 1/2"	8"	4"
	S2	1'-1 3/4"	8"	1'-5 3/4"	4"	4 1/2"	7 1/2"	8"	4"
	S3	11 1/2"	6 3/4"	1'-4"	2 1/4"	5 1/2"	6 3/4"	6 3/4"	5 1/2"
	S4	11 1/2"	3 1/2"	1'-0"	3"	5 1/2"	5"	3 1/2"	7"
60°	S1	1'-0"	6"	1'-0 3/4"	5 1/4"	6"	7 1/4"	10 1/4"	3"
	S2	1'-2"	6"	1'-2 3/4"	5 1/4"	4 3/4"	8 3/4"	10 1/2"	3"
	S3	1'-0"	4 3/4"	1'-1 1/2"	3 1/4"	6"	8"	8 3/4"	5 1/4"
	S4	1'-0"	2 1/2"	10"	4 1/2"	6"	5 3/4"	4"	7 1/2"

STIRRUP DIMENSIONS (T = 12")

φ	BAR MARK	R1	R2	R3	R4	R5	R6	R7	R8
30°	S1	11 1/2"	10"	1'-6"	3 1/2"	7"	4 3/4"	5 3/4"	6"
	S2	1'-1 3/4"	10"	1'-8 1/4"	3 1/2"	6 1/2"	5 1/4"	5 3/4"	6"
	S3	11 1/2"	8 1/4"	1'-5 3/4"	2"	7"	4 3/4"	4 1/2"	7 1/4"
	S4	11 1/2"	4"	1'-1 1/4"	2 1/4"	7"	3 3/4"	2 1/2"	8 1/4"
45°	S1	1'-0"	8 1/2"	1'-3 1/4"	5 1/4"	7 1/2"	6 1/4"	8 1/2"	5 1/4"
	S2	1'-2 1/4"	8 1/2"	1'-5 1/2"	5 1/4"	6 1/2"	7 1/4"	8 1/2"	5 1/4"
	S3	1'-0"	7"	1'-4"	3"	7 1/2"	6 3/4"	7"	7 1/4"
	S4	1'-0"	3 1/2"	11 3/4"	3 3/4"	7 1/2"	5"	3 1/2"	9"
60°	S1	1'-0 1/2"	6 1/4"	11 3/4"	7"	8"	6 3/4"	10 3/4"	4"
	S2	1'-2 3/4"	6 1/4"	1'-2"	7"	6 3/4"	8"	10 3/4"	4"
	S3	1'-0 1/2"	5"	1'-1 1/2"	4"	8"	8"	9"	7"
	S4	1'-0 1/2"	2 1/2"	9 1/2"	5 1/2"	8"	5 1/2"	4 1/4"	9 1/4"

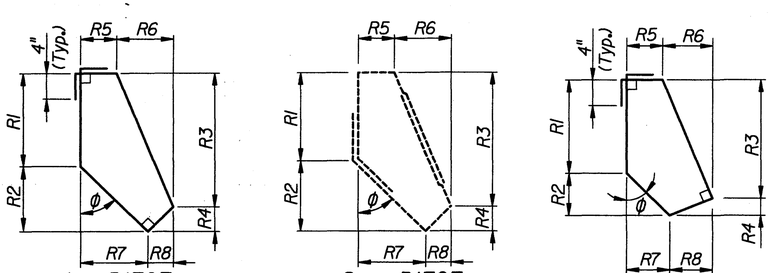

1 - PIECE

2 - PIECE

BARS S1 & S2

BARS S3 & S4

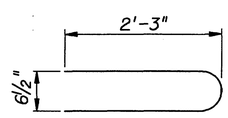

PICK-UP BAR (#7)

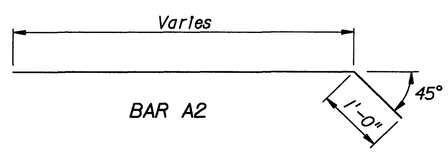

BAR A2

NOTES:

1. Work this standard with Index No. S-650.
2. This drawing includes details for precast concrete corner piles for 10" and 12" thick sheet pile systems. The details apply equally to both thicknesses.
3. The bar configurations shown in Sections A-A and B-B shall be used for φ angles between 15° and 75°. For φ angles not shown, the reinforcing bar dimensions may be interpolated or extrapolated from the stirrup dimensions shown.
4. All bar dimensions are out-to-out.
5. Bars A are #8 and Bars S are #4.
6. Values for Stirrup Dimensions are shown for φ equal to 30°, 45° & 60° only.
7. At the Contractor's option Bars S may be fabricated as a 2 piece bar with a minimum lap length of 1'-6", as shown in Bar Bending Diagrams.
8. If Type "B" pile is used as a Starter Pile show tongue on both sides of pile from Dim. "X" down. Show dimensions for Bars S2, S3 & S4 in shop drawings.
9. If tongue must be on the opposite side from that shown all dimensions will be the same but opposite hand.

REVISIONS

DATE	BY	DESCRIPTION	DATE	BY	DESCRIPTION

	NAMES	DATES
DRAWN BY	KFS	4-00
CHECKED BY	JRA	4-00
DESIGNED BY	JRA	4-00
CHECKED BY	KFS	4-00
APPROVED BY	RDS	

ENGINEER OF RECORD:
STRUCTURES DESIGN OFFICE
CENTRAL OFFICE
605 Suwannee Street, MS 33
Tallahassee, Florida 32399-0450

FLORIDA DEPARTMENT OF TRANSPORTATION

ROAD NO.	COUNTY	FINANCIAL PROJECT ID

SHEET TITLE: PRECAST CONCRETE SHEET PILES TYPE "B" VARIABLE ANGLE CORNER PILE - INDEX NO. 680

PROJECT NAME: FORT DESOTO WATER CIRCULATION IMPROVEMENTS

SHEET NO. 39

02/25/03 3:21:26 PM

F:\BRIDGES\FORT DESOTO\WATER CIRCULATION IMPROVEMENTS\EDOTSTDS\GROWCT.DGN

MARK SIZE	MARK DES	LENGTH FT IN	NO BARS	TYP BAR	STY A	STY G	B FT IN FR	C FT IN FR	D FT IN FR	E FT IN FR	F FT IN FR	H FT IN FR	J FT IN FR	K FT IN FR	N NO	O ANG
LOCATION MAINTENANCE ROAD BRIDGE - END BENTS NO. REQUIRED = 2																
4	B1A	9- 3	48	45	1		1-10	3- 4	1- 9							
4	B1B	8- 0	6	44	1	1	1-10	3- 4								
8	B2A	49- 8	2	1			49- 8									
8	B2B	6- 4	5	1			6- 4									
4	B2C	2- 6	2	1			2- 6									
8	B3	49- 8	4	1			49- 8									
4	B4	4- 8	47	11			0- 4	2- 2	2- 2							
4	B5	26- 1	4	1			26- 1									
4	B6	3- 9	6	1			3- 8 3/4									
4	B7	8- 6	18	17	3		7-10									
4	B8	6- 4	10	1			6- 4									
4	B9	5- 0	8	12			2- 0	3- 0								76
4	B10	3- 4	6	1			3- 4									
4	B11	3- 0	8	1			3- 0									
4	B12	1- 6	12	1			1- 6									
4	B13	8- 9	2	11			0- 8	4- 0 1/2	4- 0 1/2							
4	B14	26- 1	4	1			26- 1									
LOCATION ENTRANCE ROAD BRIDGE - END BENTS NO. REQUIRED = 2																
4	B1A	9- 3	62	45	1		1-10	3- 4	1- 9							
4	B1B	8- 0	8	44	1	1	1-10	3- 4								
8	B2A	34-11	4	1			34-11									
8	B2B	6- 4	7	1			6- 4									
4	B2C	2- 0	2	1			2- 0									
8	B3	34-11	8	1			34-11									
4	B4	4- 8	63	11			0- 4	2- 2	2- 2							
4	B5	34- 1	4	1			34- 1									
4	B6	3- 9	6	1			3- 8 3/4									
4	B7	8- 6	18	17	3		7-10									
4	B8	6- 4	10	1			6- 4									
4	B9	5- 0	8	12			2- 0	3- 0								76
4	B10	3- 4	6	1			3- 4									
4	B11	3- 0	8	1			3- 0									
4	B12	1- 6	16	1			1- 6									
4	B13	8- 9	2	11			0- 8	4- 0 1/2	4- 0 1/2							
4	B14	34- 1	4	1			34- 1									
LOCATION MAINTENANCE ROAD BRIDGE - SUPERSTRUCTURE NO. REQUIRED = 1																
3	S1A	25- 1	90	1			25- 1									
3	S1B	22- 8	98	1			22- 8									
4	S2	25- 3	8	1			25- 3									
LOCATION ENTRANCE ROAD BRIDGE - SUPERSTRUCTURE NO. REQUIRED = 1																
3	S1A	33- 0	90	1			33- 0									
3	S1B	22- 8	130	1			22- 8									
4	S2	33- 3	8	1			33- 3									

NOTE: REINFORCING BAR LIST DOES NOT INCLUDE BULKHEAD WALLS. SEE SHEET 35 FOR BULKHEAD REINFORCING DETAILS.

REVISIONS	BY	DATE

SURVEY BOOK No.:	BY	DATE
SURVEY DIVISION		
SURVEYED	---	---
TECHNICIAN	---	---
CHECKED	---	---
DESIGN DIVISION		
DESIGNED	MCM	7/01
DRAWN	JBH	7/01
CHECKED	MCM	7/01

PINELLAS COUNTY, FLORIDA
Public Works

URS
URS CORPORATION SOUTHERN
7650 WEST COURTNEY
CAMPBELL CAUSEWAY
TAMPA, FLORIDA 33607-1462
NO. 00000002

MURRAY C. McDONOUGH FLORIDA REGISTERED PROFESSIONAL ENGINEER No. 43353

2/25/03
DATE

FORT DESOTO
WATER CIRCULATION
IMPROVEMENTS

REINFORCING BAR LIST

DATE: FEBRUARY, 2003
PROJECT ID NO.: 921573
SURVEY FILE NO.: N/A
SHEET 40 OF 41
FILE: ...\BBARØ1.DGN
VIEW: PLOT

e:\bridges\fort desoto\water circulation improvements\entrance road\bbarØ1.dg

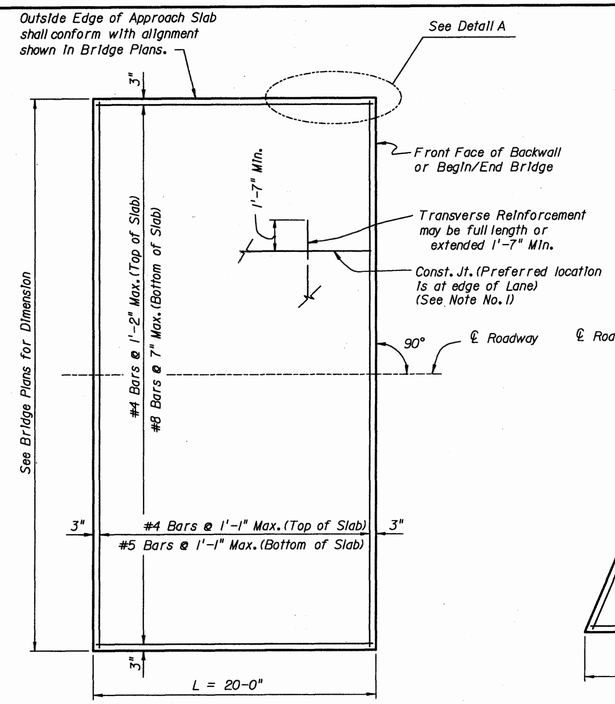

CASE I
(See Note No. 2)

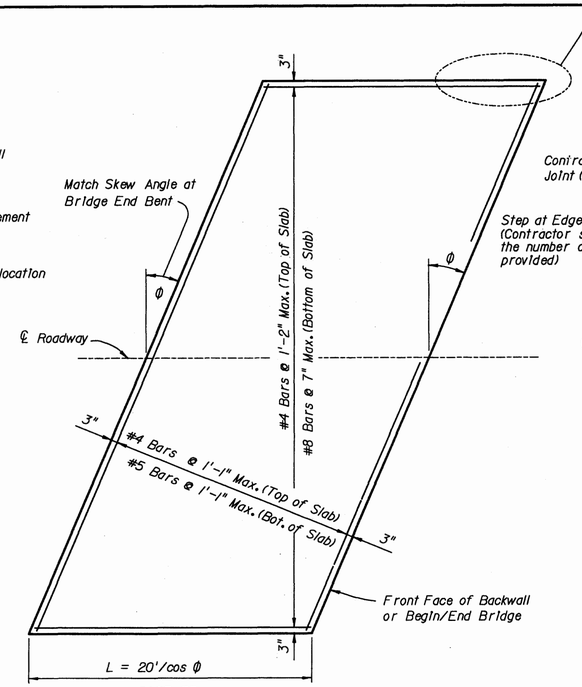

CASE II
(See Note No. 3)

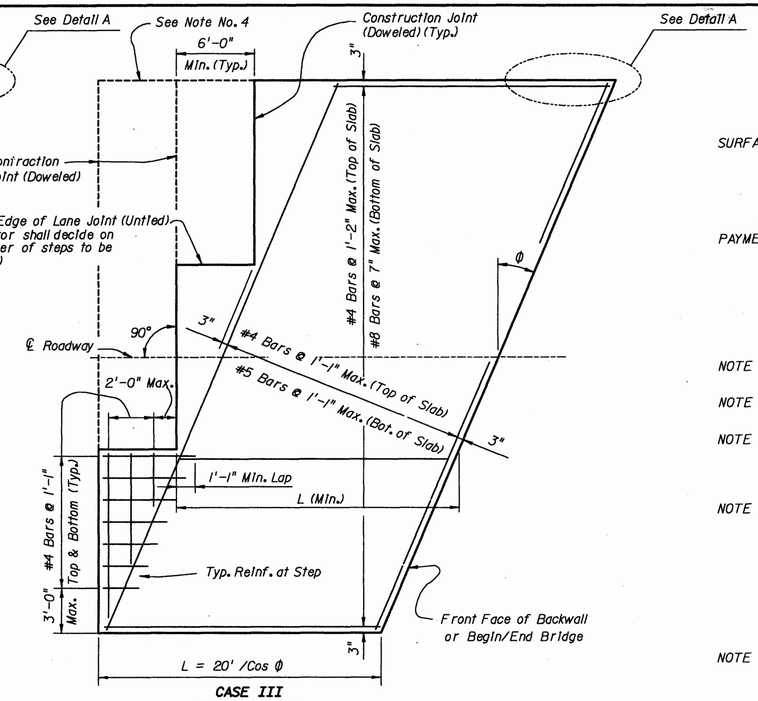

CASE III
(See Note No. 4)

GENERAL NOTES

SURFACE TREATMENT: Same as Bridge. Grooving of the riding surface is a Bridge Pay Item. If the work does not involve grooving of the bridge, then the riding surface of the approach slab shall be grooved in accordance with Subarticle 400-15.2.5 of the Specifications, and payment shall be included in the bid price for Concrete Approach Slabs.

PAYMENT: Payment shall be made under: Item No. 400-2-10 Class II Concrete (Approach Slab) CY and Item 415-1-9 Reinforcing Steel (Approach Slab) lb. The work shall comply with details on this Sheet, Section 400 of the Specifications, Bridge and Roadway Plans. The prices and payment shall be full compensation for all work required to construct the Approach Slab. All items attached to the Approach Slab will be paid for separately.

NOTE No. 1: When a longitudinal joint is necessary or allowed by the Engineer, the transverse steel shall be extended as shown.

NOTE No. 2: The plan view for CASE I applies when the skew angle = 0. Relevant details also apply to CASES II and III.

NOTE No. 3: The plan view for CASE II applies where the skew angle ≠ 0, and the roadway pavement is flexible. The slab as shown is skewed to the right: a left skew shall be treated similarly.

NOTE No. 4: The plan view for CASE III, applies where the skew angle at the bridge end = 0 and the roadway pavement is rigid (concrete). The slab is skewed at the bridge end and normal at the roadway end. The slab as shown is skewed to the right; a left skew shall be treated similarly. The slab may be constructed with steps as shown or without steps. In either case, the shown reinforcement shall be utilized, and Dowels shall be provided in accordance with Indices 305 and 306 (Roadway and Traffic Design Standards).

NOTE No. 5: If the Bridge or Roadway Plans indicate a raised sidewalk(s) and/or any type of railing on the approach slab, these shall be provided as shown.

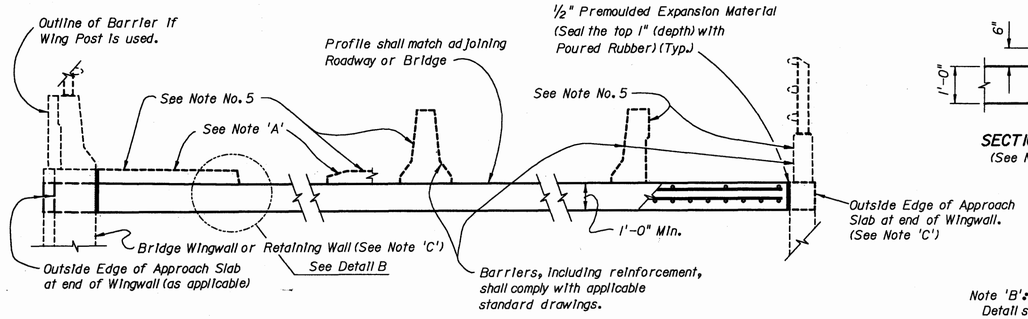

TRANSVERSE SECTION

Note 'A':
Raised Sidewalks and raised median shall be built using plain (unreinforced) concrete. The sidewalk width shall be extended to the outside edge of approach slab at areas beyond wingwall. See Roadway Plans for additional details.

Note 'C': If Wingwall/Retaining Wall is not used, mount railing system on Approach Slab.

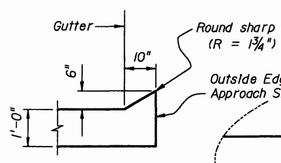

SECTION C-C
(See Note 'B')

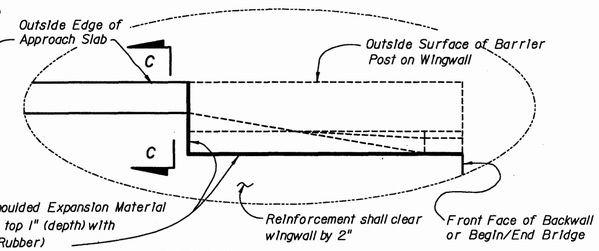

DETAIL A
(Part Plan)

Note 'B':
Detail shown on Section C-C applies beyond Wing Post for Traffic Railing Barrier along the edge of the Bridge. This detail does not apply at raised sidewalk.

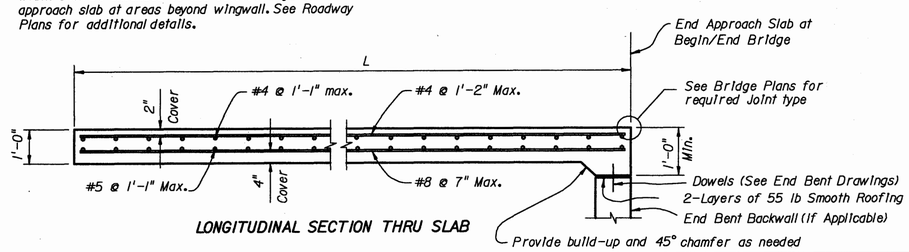

LONGITUDINAL SECTION THRU SLAB

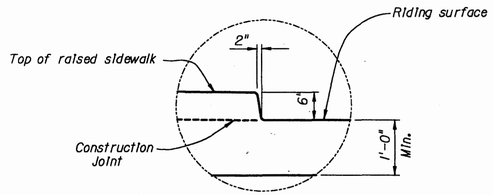

DETAIL B

ESTIMATED QUANTITIES (ENTRANCE ROAD BRIDGE) *		
ITEM	UNIT	QUANTITY
Concrete	C.Y.	48.00
Reinforcing Steel	LB.	17,444

* Quantities shown are for individual approach slab and do not include items placed on the slab such as: raised median and barriers.

ESTIMATED QUANTITIES (MAINTENANCE ROAD BRIDGE) *		
ITEM	UNIT	QUANTITY
Concrete	C.Y.	36.15
Reinforcing Steel	LB.	13,137

* Quantities shown are for individual approach slab and do not include items placed on the slab such as: raised median and barriers.

REVISIONS	BY	DATE

SURVEY BOOK No.:		
SURVEY DIVISION	BY	DATE
SURVEYED	---	---
TECHNICIAN	---	---
CHECKED	---	---
DESIGN DIVISION		
DESIGNED	MCM	9/02
DRAWN	CER	9/02
CHECKED	MCM	9/02

PINELLAS COUNTY, FLORIDA
Public Works

URS CORPORATION SOUTHERN
7650 WEST COURTNEY CAMPBELL CAUSEWAY
TAMPA, FLORIDA 33607-1462
NO. 00000002

MURRAY C. McDONOUGH FLORIDA REGISTERED PROFESSIONAL ENGINEER No. 43353

2/25/03
DATE

FORT DESOTO
WATER CIRCULATION IMPROVEMENTS

APPROACH SLABS

DATE: FEBRUARY, 2003
PROJECT ID NO.: 921573
SURVEY FILE NO.: N/A
SHEET 41 OF 41
FILE: ..\BAPPB201.D
VIEW: PLOT

e:\bridges\fort desoto\water circulation improvements\maintenance road\bappb201.dg

PINELLAS COUNTY ENGINEERING DEPARTMENT
STATE OF FLORIDA

PLANS OF PROPOSED

FORT DESOTO WATER CIRCULATION IMPROVEMENT

ATTACHED UTILITY RELOCATION PLANS
(TELEPHONE & STREET LIGHTING)

P.I.D. NO. 921573

SERVING YOU EVERY DAY

PINELLAS COUNTY GOVERNMENT IS COMMITTED TO PROGRESSIVE PUBLIC POLICY, SUPERIOR PUBLIC SERVICE, COURTEOUS PUBLIC CONTACT, JUDICIOUS EXERCISE OF AUTHORITY AND SOUND MANAGEMENT OF PUBLIC RESOURCES TO MEET THE NEEDS AND CONCERNS OF OUR CITIZENS TODAY AND TOMORROW.

ATTENTION IS DIRECTED TO THE FACT THAT THESE PLANS MAY HAVE BEEN REDUCED IN SIZE BY REPRODUCTION. THIS MUST BE CONSIDERED WHEN OBTAINING SCALED DATA.

UTILITY WARNING NOTE

ABOVE GROUND AND UNDERGROUND UTILITIES MAY BE IN THE AREA OF THIS PROJECT – PROCEED WITH CAUTION – CALL "SUNSHINE" AND THE UTILITY OWNER(S) 2 WORKING DAYS IN ADVANCE OF BEGINNING WORK (1-800-432-4770).

LENGTH OF PROJECT		
	TOTAL	
	LIN. FT.	MILES
BRIDGES	128.68	0.0244
NET LENGTH OF PROJECT	1,967.17	0.3726
EXCEPTIONS	0.00	0.000
GROSS LENGTH OF PROJECT	1,967.17	0.3726

ROAD CLASSIFICATION: PARK
DESIGN SPEED: 40 MPH

SUMMARY OF REVISIONS	
DATE	DESCRIPTION

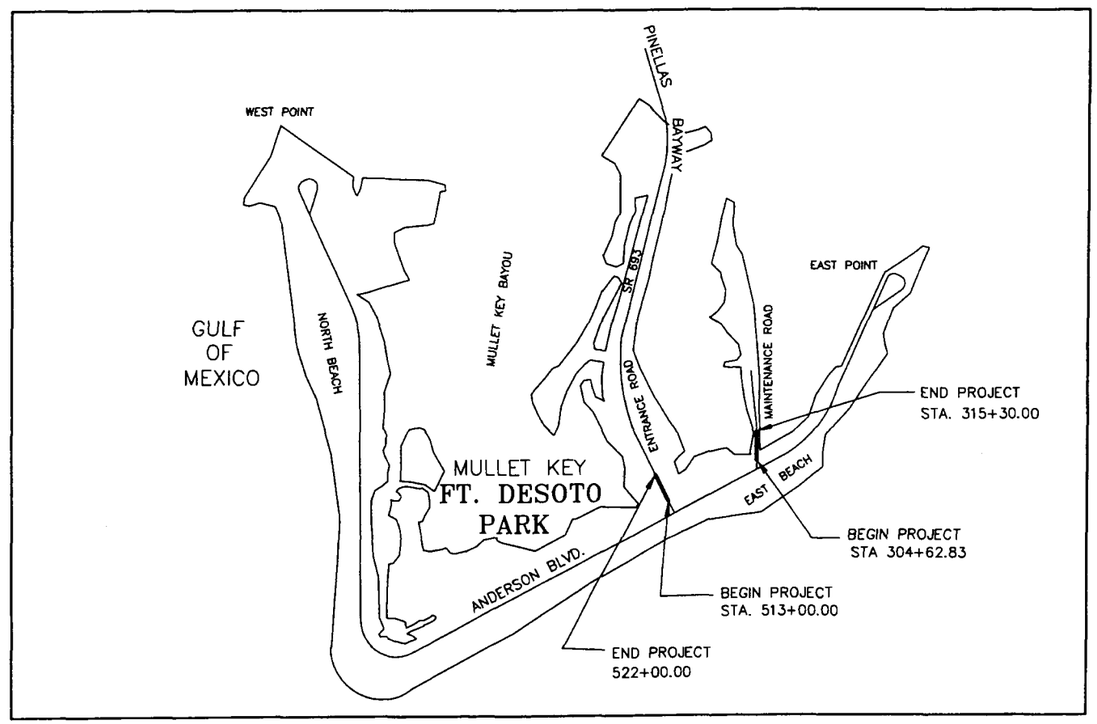

N.T.S.

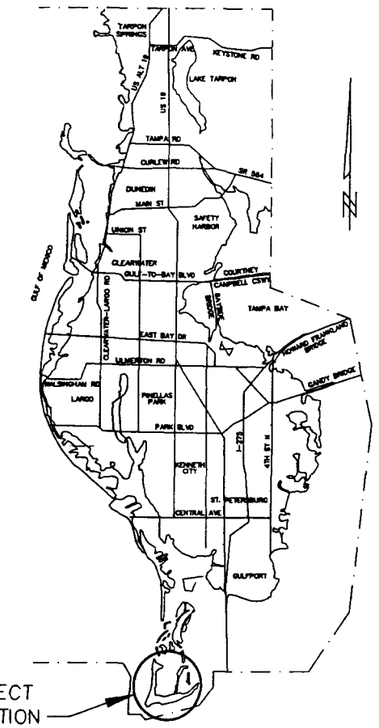

INDEX OF PLANS

SHEET NO.	SHEET DESCRIPTION
U-1 TO U-6	VERIZON TELEPHONE RELOCATION PLANS
U-7 TO U-9	PROGRESS ENERGY FLORIDA INC. STREET LIGHTING PLANS

PROJECT PRODUCTION TEAM
(CORE MEMBERS)

DESIGN: GUILLERMO "BILLY" BAY (PROJECT MANAGER) (464-4369)
PARK ENGINEER: ED LUCAS
PARK SUPERVISOR: BOB BROWNING
D.E.M.: JIM MEYER
RIGHT-OF-WAY: SONNY NAAR
CONSTRUCTION: DON KERSTING
SURVEY: DANNY BURGESS
TRAFFIC: ROBERT DAVIS
HIGHWAY: DENNIS GRIZZELL
UTILITY COORDINATOR: SANDY KELLEY
PERMIT COORDINATOR: NANCY CASTRICONE,P.E.

SECTION No. 8, 9
TOWNSHIP No. 33 S RANGE No. 16 E

PROPOSED VERIZON
4" PVC W/THCABLE
STA 512+50
37' LT.

EXISTING VERIZON
CABLE TO BE REMOVED

CURVE BIKE-1
PI STA. 11+83.14
Δ = 91°13'55" RT.
D = 11°27'33"
T = 40.37'
L = 80.56'
R = 500.00'
PC STA. 11+42.77
PT STA. 12+23.34

CURVE BIKE-2
PI STA. 14+62.45
Δ = 14°32'36" LT.
D = 22°55'06"
T = 31.90'
L = 63.46'
R = 250.00'
PC STA. 14+30.55
PRC STA. 14+94.01

CURVE BIKE-3
PI STA. 15+25.91
Δ = 14°32'30" RT.
D = 22°55'06"
T = 31.90'
L = 63.46'
R = 250.00'
PRC STA. 14+94.01
PT STA. 15+57.46

NO UTILITIES LOCATED IN THIS AREA

BEGIN CONSTRUCTION
STA 513+00.00
SAWCUT & MATCH EXISTING PAVEMENT
BEGIN FULL TYPICAL SECTION
STA 514+00.00
N 1196655.0365
E 268496.1121

ENTRANCE ROAD

℄ SURVEY

℄ CONSTRUCTION

COMPACTION WITHIN RIGHT OF WAY
TO MEET PINELLAS COUNTY MINIMUM
STANDARDS

BEGIN RELOCATED BIKE PATH
STA. 511+50 73.9' RT.
STA. 10+00
BEGIN REMOVAL OF EXISTING
ASPHALT BIKE PATH

NO UTILITIES LOCATED IN THIS AREA

ASPHALT BIKE PATH

℄ CONSTRUCTION RELOCATED BIKE PATH
(SEE SHEET 9 FOR PROFILE)

CURVE BIKE-1

REMOVE EXISTING
ASPHALT BIKE PATH

POND 1
(SEE DRAINAGE DETAILS)

S-4

6:1
6:1

TOB = 6.0
TOS = 4.0

STA. 514+49, 43.0' LT
CONST 8" SLEEVE
CONNECTION WITH 8"
R.W. GATED VALVE AND
SAMPLING POINT

BEGIN
SHOULDER GUTTER
STA. 514+18.50

CONST 14 LF 12" FRCP

CONST 41 LF 12" FRCP

S-2

S-1

BEGIN
SHOULDER-GUTTER
STA. 514+18.50

2" MISC.
ASPHALT PAVEMENT

STAKED SILT FENCE
(SEE FDOT INDEX 104)

CONST RIPRAP

BULKHEAD
(SEE BRIDGE PLANS)

BEGIN GUARDRAIL
STA. 514+84.00

BEGIN FDOT
GRAVITY WALL
STA. 516+00.00

BEGIN SIDEWALK
STA. 516+27.66

CONST. 416 LF. 8"
HDPE WATER LINE BY
DIRECTIONAL BORE

FDOT GRAVITY
WALL
SIDEWALK

STD. GUARDRAIL
FLARE

GUARDRAIL

SHOULDER

SHOULDER GUTTER

CONST. 290 LF. 10" HDPE FORCE
MAIN BY DIRECTIONAL BORE

STD.
GUARDRAIL
FLARE

BEGIN GUARDRAIL
STA. 515+84.00

STA. 515+75, 29.0' LT
CONST 10" SLEEVE
CONNECTION AND AIR
RELEASE VALVE

CURVE BIKE-2

REMOVE EXISTING
ASPHALT BIKE PATH

CONST RIPRAP

BULKHEAD (SEE BRIDGE PLANS)

2" MISC.
ASPHALT PAVEMENT

STAKED SILT FENCE
(SEE FDOT INDEX 104)

511+00 512+00 513+00 514+00 515+00 516+00

GRAPHIC SCALE IN FEET

48 HOURS BEFORE YOU DIG
CALL SUNSHINE
1-800-432-4770
IT'S THE LAW IN FLORIDA

ALL ACTIVITIES IN ACCORDANCE WITH THIS PERMIT WILL REQUIRE CONFORMANCE TO THE "MANUAL ON TRAFFIC CONTROL AND SAFE PRACTICES FOR STREET AND HIGHWAY CONSTRUCTION, MAINTENANCE AND UTILITY OPERATIONS."
(CHAPTER 316 FLORIDA STATUTES)

Reviewing is only for conformance with the design concept of the Project and compliance with the information given in the Contract Documents. The Owner, by his review of this submitted information does not certify the correctness of any design performed to prepare the submitted information. Review is subject to any necessary corrections for errors or omissions and subject to fulfillment of any requirements of the Contract or is responsible for dimensions and quantities to be confirmed and correlated at the job site.

PINELLAS COUNTY PUBLIC WORKS ENGINEERING

☑ REVIEWED ☐ REVIEWED - RESUBMIT

☐ REVIEWED AS NOTED ☐ REVIEWED AS NOTED - RESUBMIT

BY: DATE: 2/13/03

RECEIVED
PINELLAS COUNTY
FEB 13 2003
RIGHT-OF-WAY
UTILIZATION PERMITS

BEGIN CONSTRUCTION
STA 513+00
SAWCUT & MATCH
EXISTING PAVEMENT

PVC 513+35.52
ELEV 8.42

PROFILE GRADE

PVT 514+65.52
ELEV 8.06

PVC 515+12.83
ELEV 8.34

200.00' VC
PVI STA = 516+12.83
PVI ELEV = 10.80
HP STA = 516+85
HP ELEV = 10.54

PVI STA = 513+90.52
150.00' VC

0.33%

1.86%

EXIST GRADE

STA. 512+50. 37' Lt
BEGIN PROPOSED VERIZON
4" PVC/CABLE

BEGIN DIRECTIONAL DRILL
STA. 515+50
37' Lt.

8.5 8.4 8.4 8.4 8.4 8.4 8.37 +25 8.46 8.4 8.60 +75 8.80 8.4 8.06 +25 7.39 8.3 7.79 8.3 8.76 +25 9.16 8.2 9.56 +75 9.89 8.2 10.15 +25 10.34 8.2 10.44

511+00 512+00 513+00 514+00 515+00 516+00

REVISIONS	BY	DATE

SURVEY BOOK No.:
SURVEY DIVISION — BY — DATE
SURVEYED
TECHNICIAN
CHECKED
DESIGN DIVISION
DESIGNED — BY — DATE
DRAWN — BY — DATE

PINELLAS COUNTY, FLORIDA
Public Works

ENGINEERING DEPARTMENT
440 COURT STREET
CLEARWATER, FLORIDA 34616
PHONE (727) 464-3881

LAND SURVEY DIVISION -
3301 U.S. HWY. 19 NORTH
CLEARWATER, FLORIDA 34625-5247
PHONE (727) 464-3904

PROFESSIONAL ENGINEER No. 41841 DATE

FORT DESOTO
WATER CIRCULATION
IMPROVEMENTS

SHEET U-1

PLAN & PROFILE
ENTRANCE ROAD
VERIZON: REV 1

DATE: FEBRUARY, 2002
PROJECT NO.: 921573
SURVEY FILE NO.: 228
SHEET 7 OF 26
FILE: DESIGN1
VIEW: EP&P1

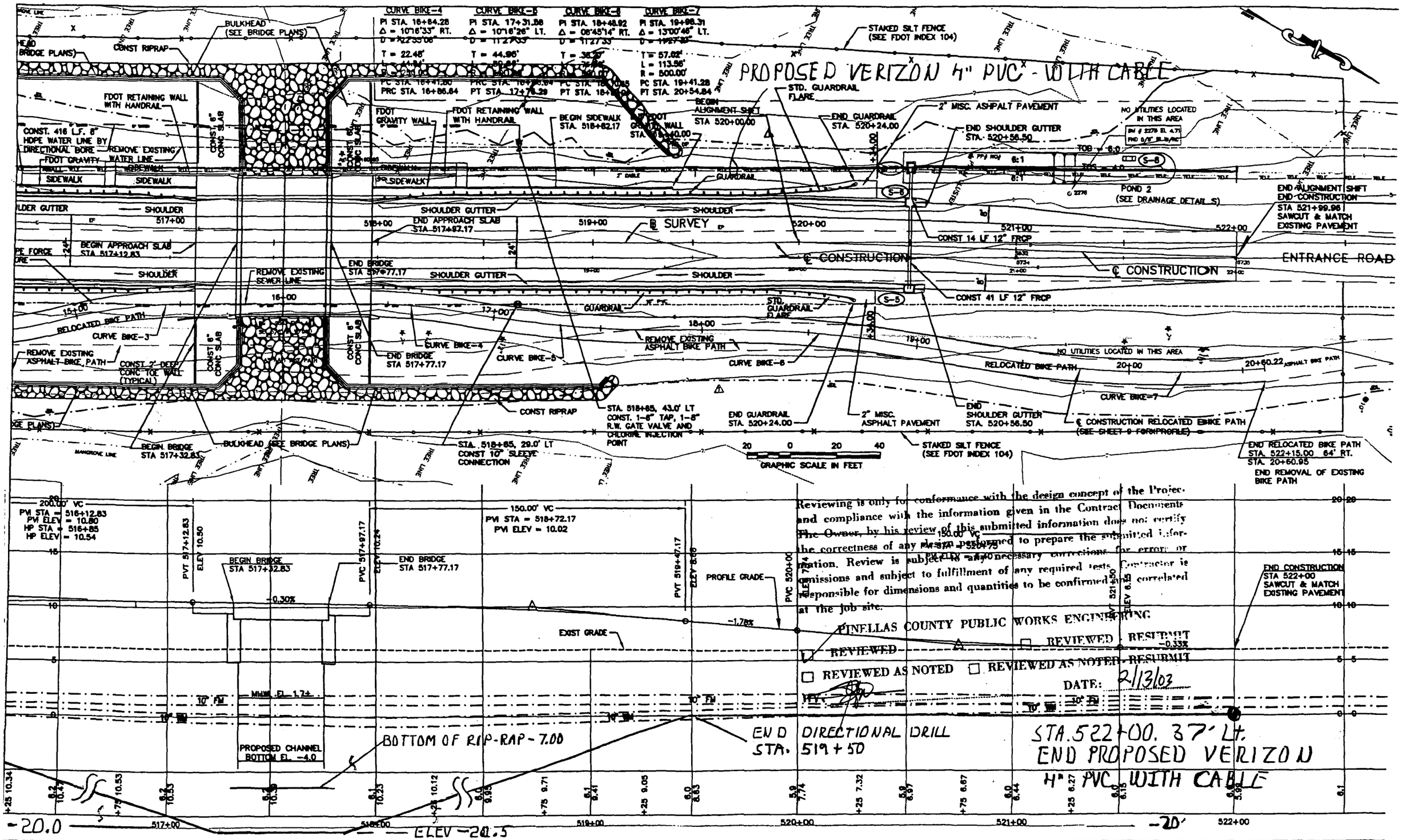

Reviewing is only for conformance with the design concept of the Project and compliance with the information given in the Contract Documents. The Owner, by his review of this submitted information does not certify the correctness of any [illegible] performed to prepare the submitted information. Review is subject to all necessary corrections for errors or omissions and subject to fulfillment of any required tests. Contractor is responsible for dimensions and quantities to be confirmed and correlated at the job site.

PINELLAS COUNTY PUBLIC WORKS ENGINEERING

☐ REVIEWED ☐ REVISE & RESUBMIT

☐ REVIEWED AS NOTED ☐ REVIEWED AS NOTED - RESUBMIT

BY: [illegible] DATE: 2/13/03

REVISIONS	BY	DATE

SURVEY BOOK No.:

SURVEY DIVISION	BY	DATE
SURVEYED		
TECHNICIAN		
CHECKED		
DESIGN DIVISION		
DESIGNED	PMB/DQE	10/01
DRAWN	BMB	BMB

PINELLAS COUNTY, FLORIDA
Public Works

ENGINEERING DEPARTMENT
440 COURT STREET
CLEARWATER, FLORIDA 34616
PHONE (727) 464-3881

LAND SURVEY DIVISION
[illegible] U.S. HWY. 19 NORTH
CLEARWATER, FLORIDA 34665-5367
PHONE (727) 464-3904

FORT DESOTO
WATER CIRCULATION
IMPROVEMENTS

SHEET U-2

PLAN & PROFILE
ENTRANCE ROAD

DATE: FEBRUARY, 2002
PROJECT NO.: 921673
SURVEY FILE NO.: 226
SHEET 8 OF 26
FILE: DESIGN
VER: EPMP2

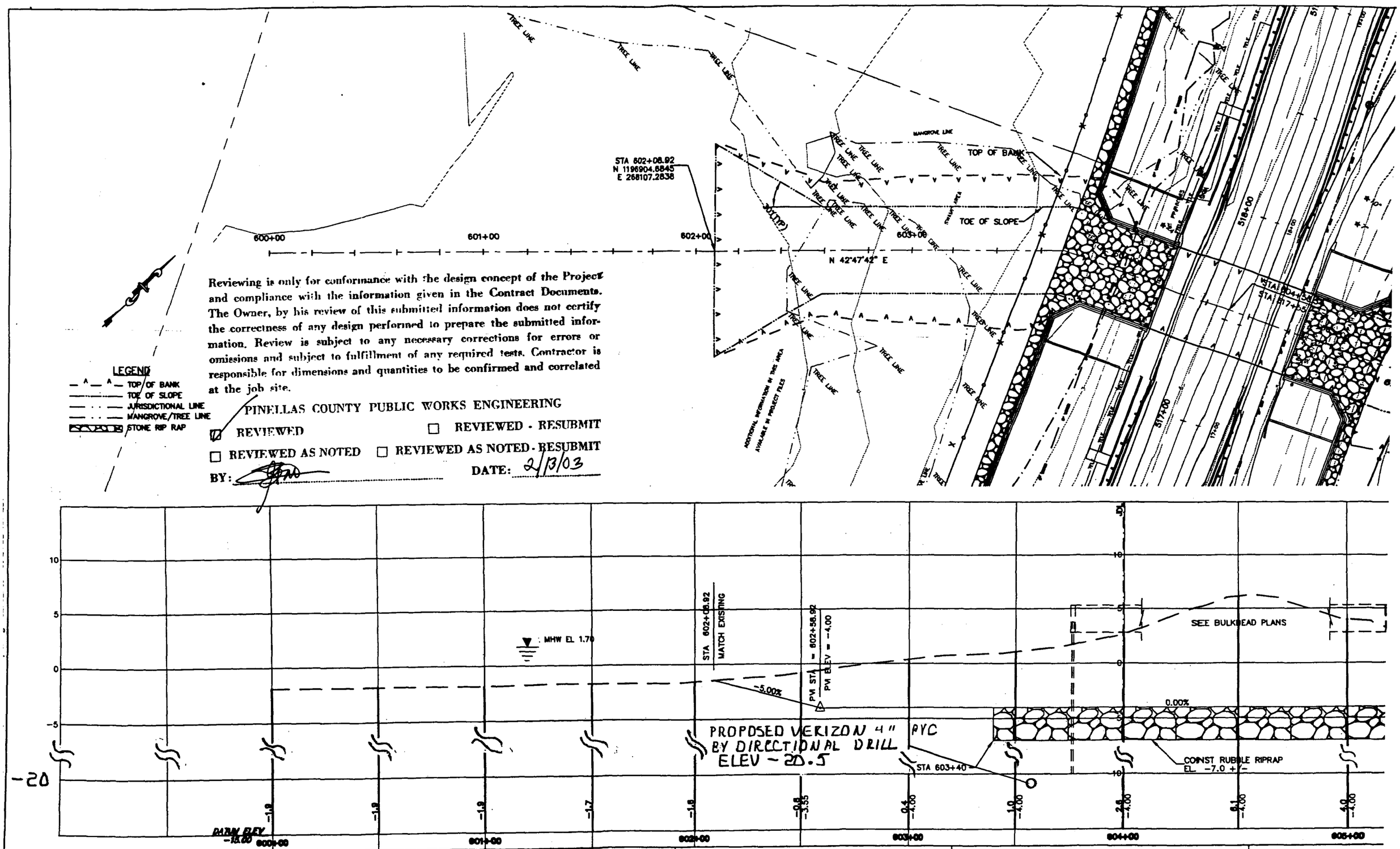

REVISIONS	BY	DATE

SURVEY BOOK No.:		
SURVEY DIVISION	BY	DATE
SURVEYED		
TECHNICIAN		
CHECKED		
DESIGN DIVISION		
DESIGNED	RMB/DGB	10/01
DRAWN	SMP	SMP

PINELLAS COUNTY, FLORIDA
Public Works

ENGINEERING DEPARTMENT
440 COURT STREET
CLEARWATER, FLORIDA 34616
PHONE (727) 464-3881

LAND SURVEY DIVISION
8551 U.S. HWY. 19 NORTH
CLEARWATER, FLORIDA 34666-5347
PHONE (727) 464-8904

FLORIDA REGISTERED PROFESSIONAL ENGINEER No. 41941 DATE

FORT DESOTO
WATER CIRCULATION
IMPROVEMENTS

SHEET U-3

PLAN & PROFILE
ENTRANCE CHANNEL

DATE: FEBRUARY, 2002
PROJECT NO.: 921573
SURVEY FILE NO.: 226
SHEET 9 OF 26
FILE: DESI
VIEW: CHA

PROPOSED VERIZON
CABLE & CONDUIT
EXISTING - TO BE REMOVED

BEGIN CONSTRUCTION
STA 304+62.83
SAWCUT & MATCH EXISTING PAVEMENT

POND 3 (SEE DRAINAGE DETAILS)

S-12 S-11 S-10 S-9

6:1 6:1 TOS = 3.75

CONST 14 LF 12" FRCP

SHOULDER

BEGIN SHOULDER GUTTER
STA. 306+42.33

CONST 28 LF 12" FRCP

2" MISC. ASPHALT PAVEMENT

BEGIN GUARDRAIL
STA. 307+60.00

STD. GUARDRAIL FLARE

BEGIN FDOT GRAVITY WALL
STA. 308+00.00

STAKED SILT FENCE
(SEE FDOT INDEX 104)

STA. 309+20, 34.0' LT CONST 1-6" TAP, 1-6" R.W. GATE VALVE AND CHLORINE INJECTION POINT

STA. 309+20, 20.0' LT

CONST 4" SLEEVE CONNECTION

SHOULDER GUTTER

GUARDRAIL

CONST RIPRAP

CONST. 220 L.F. 6" HDPE WATER LINE BY DIRECTIONAL BORE

REMOVE EXISTING WATER LINE

BULKHEAD (SEE BRIDGE PLANS)

FDOT RETAINING WALL WITH HANDRAIL

FDOT GRAVITY WALL

SIDEWALK

CONST. 220 L.F. 4" HDPE FORCE MAIN BY DIRECTIONAL BORE

BEGIN BRIDGE
STA 310+07.83

REMOVE EXISTING FORCE MAIN

END BRIDGE
STA 3

BEGIN APPROACH SLAB
STA 309+87.83

CONST 6" CONC SLAB

℄ SURVEY

℄ CONSTRUCTION

305+00 306+00 307+00 308+00 309+00 310+00

GRAPHIC SCALE IN FEET 20 0 20 40

Reviewing is only for conformance with the design concept of the Project and compliance with the information given in the Contract Documents. The Owner, by his review of this submitted information does not certify the correctness of any design performed to prepare the submitted information. Review is subject to any necessary corrections for errors or omissions and subject to fulfillment of any required tests. Contractor is responsible for dimensions and quantities to be confirmed and correlated at the job site.

PINELLAS COUNTY PUBLIC WORKS ENGINEERING

☐ REVIEWED ☐ REVIEWED - RESUBMIT

☐ REVIEWED AS NOTED ☐ REVIEWED AS NOTED - RESUBMIT

DATE: 2/13/03

BY

150.00' VC
PVI STA = 305+37.83
PVI ELEV = 4.70

PVC 304+62.83

PVT 306+12.83 ELEV 5.01

PROFILE GRADE

+0.31%

1.74%

EXISTING GRADE

200.00' VC
PVI STA = 308+87.83, ELEV 10.80
HIGH POINT STA = 309+58.40, ELEV 10.54

PVC 307+87.83 ELEV 9.06

PVT 309+87.83 ELEV 10.50

BEGIN BRIDGE
STA 310+07.83

-0.30%

PVC 310+72.17

PROPOSED VERIZON
4" PVC BY DIRECTIONAL DRILL

MHWL EL. 1.7±

4" FM

6" WM

BEGIN CONSTRUCTION
STA 304+62.83
SAWCUT & MATCH EXISTING PAVEMENT

STA 304+50, 32' Lt.
BEGIN 4" PVC CONDUIT & CABLE

BEGIN DIRECTIONAL DRILL
STA. 308+00, 32' Lt

BOTTOM OF RIP-RAP - 7.0

PROPOSED CHANNEL BOTTOM EL -4.0

ELEV -20.5

4.5 +75 4.51 4.4 4.65 +25 4.85 4.4 5.10 +75 5.42 4.3 5.79 4.2 6.65 4.3 7.53 4.3 8.40 4.4 9.26 +25 9.63 4.4 9.94 +75 10.19 4.4 10.37 +25 10.49 4.4 10.54 +75 10.53 4.4 10.46 4.4 10.38

305+00 306+00 307+00 308+00 309+00 310+00

REVISIONS	BY	DATE

SURVEY BOOK No.:		
SURVEY DIVISION	BY	DATE
SURVEYED		
TECHNICIAN		
CHECKED		
DESIGN DIVISION		
DESIGNED		

PINELLAS COUNTY, FLORIDA
Public Works

ENGINEERING DEPARTMENT
440 COURT STREET
CLEARWATER, FLORIDA 34616
PHONE (727) 464-3881

LAND SURVEY DIVISION
8881 U.S. HWY. 19 NORTH
CLEARWATER, FLORIDA 34688-5347
PHONE (727) 464-3904

FORT DESOTO
WATER CIRCULATION
IMPROVEMENTS

SHEET U-4

PLAN & PROFILE
MAINTENANCE ROAD

DATE: FEBRUARY, 2002
PROJECT NO.: 921873
SURVEY FILE NO.: 228
SHEET 11 OF 26
FILE: DESIGN
VIEW: MP&P1

PROPOSED VERIZON CABLE & CONDUIT
EXISTING TO BE REMOVED

STA. 311+40, 34.0' LT CONST 8" SLEEVE CONNECTION WITH 6" R.W. GATED VALVE AND SAMPLING POINT

STAKED SILT FENCE (SEE FDOT INDEX 104)

NO UTILITIES LOCATED IN THIS AREA

(SEE BRIDGE PLANS)

CONST RIPRAP

END GUARDRAIL STA. 312+75.00

2" MISC. ASPHALT PAVEMENT

END ROADWAY CONSTRUCTION STA 315+30.00 SAWCUT & MATCH EXISTING PAVEMENT

FDOT GRAVITY WALL

END FDOT GRAVITY WALL STA. 312+30.00

STD. GUARDRAIL FLARE

POND 4 (SEE DRAINAGE DETAILS)

S-16

SIDEWALK

SIDEWALK

FDOT RETAINING WALL WITH HANDRAIL

SHOULDER GUTTER

GUARDRAIL

S-15

CONST 13 LF 12" FRCP

TOS = 3.75

SHOULDER

EXISTING GAS MAIN

END BRIDGE STA 310+52.17

311+00

STA. 311+40, 20.0' LT CONST 4" SLEEVE CONNECTION

312+00

℄ SURVEY

313+00

S-14

END SHOULDER GUTTER STA. 313+06.20

314+00

315+00

316+00

END APPROACH SLAB STA 310+72.17

℄ CONSTRUCTION

CONST 28 LF 12" FRCP

S-13

END SHOULDER GUTTER STA. 313+06.20

SIDEWALK

SIDEWALK

SHOULDER GUTTER

GUARDRAIL

CONST 6" CONC SLAB

FDOT RETAINING WALL WITH HANDRAIL

FDOT GRAVITY WALL

END FDOT GRAVITY WALL STA. 312+30.00

STD. GUARDRAIL FLARE

2" MISC. ASPHALT PAVEMENT

END GUARDRAIL STA. 312+75.00

(SEE BRIDGE PLANS)

CONST RIPRAP

STAKED SILT FENCE (SEE FDOT INDEX 104)

NO UTILITIES LOCATED IN THIS AREA

20 0 20 40

GRAPHIC SCALE IN FEET

Reviewing is only for conformance with the design concept of the Project and compliance with the information given in the Contract Documents. The Owner, by his review of this submitted information does not certify the correctness of any design performed to prepare the submitted information. Review is subject to any necessary corrections for errors or omissions and subject to fulfillment of any required tests. Contractor is responsible for dimensions and quantities to be confirmed and correlated at the job site.

PINELLAS COUNTY PUBLIC WORKS ENGINEERING

☒ REVIEWED ☐ REVIEWED - RESUBMIT

☐ REVIEWED AS NOTED ☐ REVIEWED AS NOTED - RESUBMIT

BY: DATE: 2/13/03

150.00' VC
PVI STA = 311+47.17
PVI ELEV = 10.02

PVC 310+72.17 ELEV 10.25

PVT 312+22.17 ELEV 8.71

150.00' VC
PVI STA = 314+47.17
PVI ELEV = 4.78

PVC 313+72.17 ELEV 8.09

PVT 315+22.17 ELEV 4.54

BRIDGE 310+07.83

0.30%

PROFILE GRADE

-1.75%

END BRIDGE STA 310+52.17

EXIST GRADE

END CONSTRUCTION STA 315+30.00 SAWCUT & MATCH EXISTING PAVEMENT

EL. 1.7±

PROPOSED VERIZON 4" PVC BY DIRECTIONAL DRILL

4" FM

6" WM

END DIRECTIONAL DRILL STA 312+50, 32' Lt.

STA 316+00 END PROPOSED VERIZON CABLE & CONDUIT

BOTTOM OF RIP-RAP -7.0

ED CHANNEL M EL. -4.0

4.4 10.31 | 75 10.24 | 4.4 10.12 | +25 9.9 | 4.4 9.72 | +75 9.43 | 4.3 9.07 | 4.3 8.22 | 4.3 7.35 | 4.4 6.48 | +75 6.04 | 4.4 5.84 | +25 5.30 | 4.5 5.02 | +75 4.80 | 4.5 4.64 | 4.5 | 4.5 | 4.5

311+00 ELEV -20.5 312+00 313+00 314+00 315+00 316+00

REVISIONS	BY	DATE

SURVEY BOOK No.:		
SURVEY DIVISION	BY	DATE
SURVEYED		
TECHNICIAN		
CHECKED		
DESIGN DIVISION		
DESIGNED		
DRAWN		

PINELLAS COUNTY, FLORIDA
Public Works

ENGINEERING DEPARTMENT
440 COURT STREET
CLEARWATER, FLORIDA 34616
PHONE (727) 464-3824

LAND SURVEY DIVISION
5811 U.S. HWY. 19 NORTH
CLEARWATER, FLORIDA 34688-2047
PHONE (727) 464-3824

FORT DESOTO
WATER CIRCULATION
IMPROVEMENTS

SHEET U-5

PLAN & PROFILE
MAINTENANCE ROAD

DATE: FEBRUARY, 2002

PROJECT NO.: 921573

SURVEY FILE NO.: 228

SHEET 12 OF 26

FILE: DESIGN
VER: MPAP

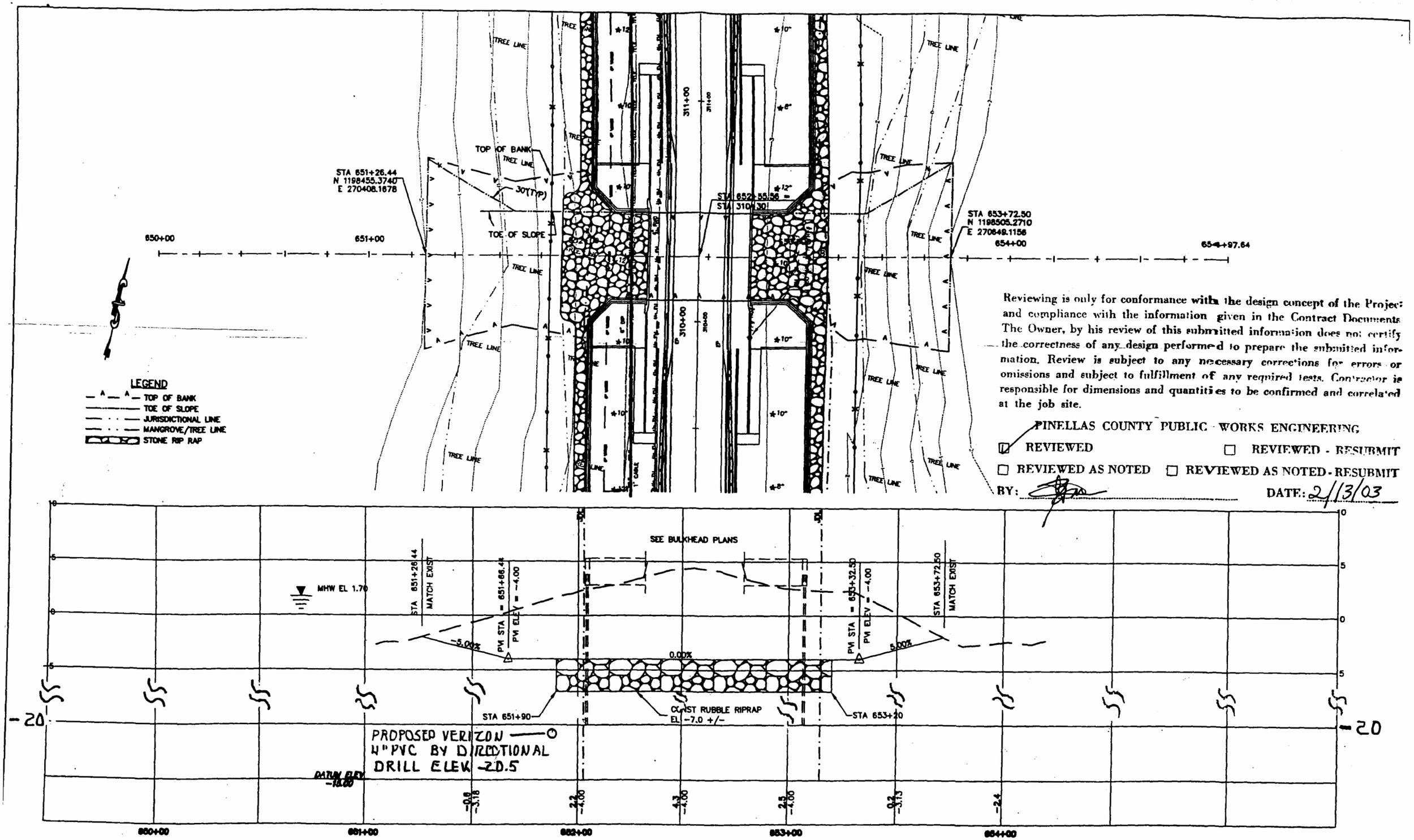

Reviewing is only for conformance with the design concept of the Project and compliance with the information given in the Contract Documents. The Owner, by his review of this submitted information does not certify the correctness of any design performed to prepare the submitted information. Review is subject to any necessary corrections for errors or omissions and subject to fulfillment of any required tests. Contractor is responsible for dimensions and quantities to be confirmed and correlated at the job site.

PINELLAS COUNTY PUBLIC WORKS ENGINEERING

☑ REVIEWED ☐ REVIEWED - RESUBMIT

☐ REVIEWED AS NOTED ☐ REVIEWED AS NOTED - RESUBMIT

BY: DATE: 2/13/03

REVISIONS	BY	DATE

SURVEY BOOK No.:
SURVEY DIVISION BY DATE
SURVEYED
TECHNICIAN
CHECKED
DESIGN DIVISION
DESIGNED

PINELLAS COUNTY, FLORIDA
Public Works

ENGINEERING DEPARTMENT
440 COURT STREET
CLEARWATER, FLORIDA 34616
PHONE (727) 464-3961

LAND SURVEY DIVISION
3801 U.S. HWY. 19 NORTH
CLEARWATER, FLORIDA 34625-5247
PHONE (727) 464-3904

FORT DESOTO
WATER CIRCULATION
IMPROVEMENTS

SHEET U-6

PLAN & PROFILE
MAINTENANCE CHANNEL

DATE: FEBRUARY, 2002
PROJECT NO.: 921673
SURVEY FILE NO.: 228
SHEET 13 OF 26
FILE: DESIGN
VIEW: CHAN 1

Progress Energy
Michael A. Mozo
Suncoast Regional Lighting Specialist
Progress Energy Florida, Inc.
12600 Walsingham Rd.
Largo, FL 33774
T > 727.588.7403
F > 727.588.7447
www.progress-energy.com
michael.mozo@pgnmail.com

PINELLAS COUNTY ENGINEERING DEPARTMENT
STATE OF FLORIDA

PLANS OF PROPOSED

FORT DESOTO WATER CIRCULATION IMPROVEMENT

SERVING YOU EVERY DAY

PINELLAS COUNTY GOVERNMENT IS COMMITTED TO PROGRESSIVE PUBLIC POLICY, SUPERIOR PUBLIC SERVICE, COURTEOUS PUBLIC CONTACT, JUDICIOUS EXERCISE OF AUTHORITY AND SOUND MANAGEMENT OF PUBLIC RESOURCES TO MEET THE NEEDS AND CONCERNS OF OUR CITIZENS TODAY AND TOMORROW.

Progress Energy Legend

□●—◇ = Proposed 35St. Concrete Pole with 250 watt "Cutoff" Roadway fixuture with flush mount Pedestal at base.

- - - - - - = 2" Gray electrical PVC with Sched. 90 bends.

P.I.D. NO. 921573

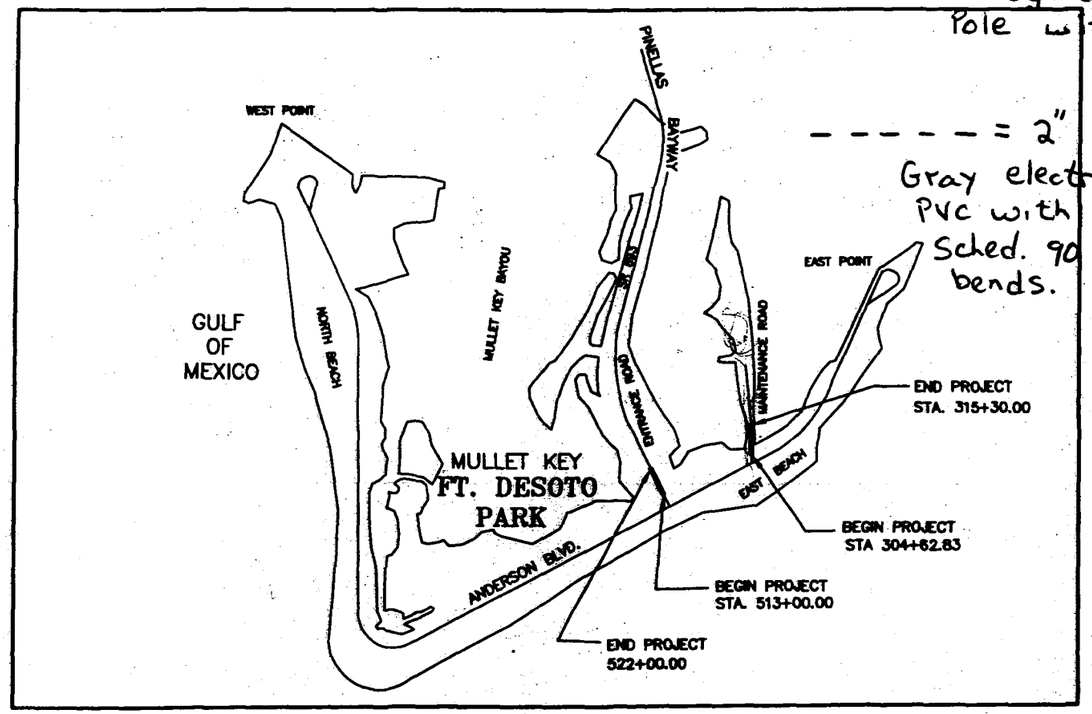

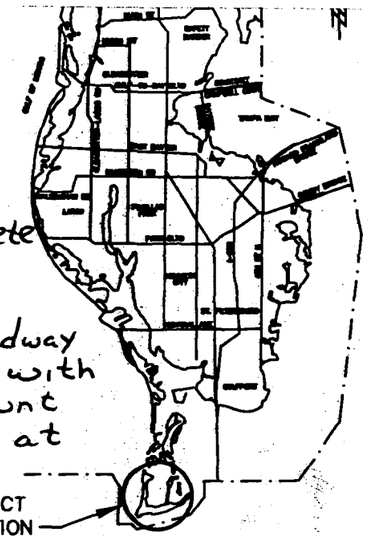

RELATED STANDARDS AND SPECIFICATIONS

DOCUMENT	DESCRIPTION
D-1	FLORIDA DEPARTMENT OF TRANSPORTATION "STANDARD SPECIFICATIONS FOR ROAD AND BRIDGE CONSTRUCTION", 2000 AND ALL SUPPLEMENTAL SPECIFICATIONS THERETO.
D-2	STATE OF FLORIDA "MANUAL OF UNIFORM MINIMUM STANDARDS FOR DESIGN, CONSTRUCTION AND MAINTENANCE FOR STREETS AND HIGHWAYS", MAY, 2001.
D-3	FEDERAL HIGHWAY ADMINISTRATION "MANUAL ON UNIFORM TRAFFIC CONTROL DEVICES FOR STREETS AND HIGHWAYS".
D-4	PINELLAS COUNTY "SPECIFICATIONS FOR HOT BITUMINOUS MIXTURES, PLANT METHODS, EQUIPMENT AND CONSTRUCTION METHODS", JULY, 2000.
	NOTE: THE PROVISIONS OF DOCUMENT D-4 SHALL SUPERSEDE CORRESPONDING PROVISIONS OF DOCUMENT D-1.
D-5	FLORIDA DEPARTMENT OF TRANSPORTATION "ROADWAY AND TRAFFIC DESIGN STANDARDS", JANUARY, 2000.
D-6	PINELLAS COUNTY ENGINEERING DEPARTMENT "SPECIFICATIONS FOR ROAD AND DRAINAGE CONSTRUCTION" (FOR CONTRACT CORRESPONDING TO THESE PLANS).
D-7	PINELLAS COUNTY, DEPARTMENT OF PUBLIC WORKS "STANDARD CONSTRUCTION DETAILS" (JANUARY, 1998).

ATTENTION IS DIRECTED TO THE FACT THAT THESE PLANS MAY HAVE BEEN REDUCED IN SIZE BY REPRODUCTION. THIS MUST BE CONSIDERED WHEN OBTAINING SCALED DATA.

UTILITY WARNING NOTE

ABOVE GROUND AND UNDERGROUND UTILITIES MAY BE IN THE AREA OF THIS PROJECT – PROCEED WITH CAUTION – CALL "SUNSHINE" AND THE UTILITY OWNER(S) 2 WORKING DAYS IN ADVANCE OF BEGINNING WORK. (1-800-432-4770).

INDEX OF PLANS

SHEET NO.	SHEET DESCRIPTION
C-1	KEY SHEET
C-2	SUMMARY OF QUANTITIES
C-3	DRAINAGE MAP
C-4	GENERAL NOTES, MAINTENANCE OF TRAFFIC NOTES & SEDIMENTATION CONTROL NOTES
C-5	TYPICAL SECTIONS
C-6	CHANNEL CONSTRUCTION GENERAL NOTES & TYPICAL SECTIONS
C-7 TO C-8	PLAN & PROFILE ENTRANCE ROAD
C-9 TO C-10	PLAN & PROFILE ENTRANCE CHANNEL
C-11 TO C-12	PLAN & PROFILE MAINTENANCE ROAD
C-13	PLAN & PROFILE MAINTENANCE CHANNEL
C-14	PROFILE RELOCATED BIKE PATH
C-15 TO C-22	CROSS SECTIONS
C-23	DRAINAGE DETAILS
C-24	RAMP DETAILS
C-25	TEMPORARY ENTRANCE ROAD PLAN & PROFILE
C-26	TEMPORARY MAINTENANCE ROAD PLAN & PROFILE

SUMMARY OF REVISIONS	
DATE	DESCRIPTION

SECTION No. 8, 9
TOWNSHIP No. 33 S RANGE No. 16 E

LENGTH OF PROJECT

	TOTAL	
	LIN. FT.	MILES
BRIDGES	128.00	0.0244
NET LENGTH OF PROJECT	1,967.17	0.3726
EXCEPTIONS	0.00	0.000
GROSS LENGTH OF PROJECT	1,967.17	0.3726

ROAD CLASSIFICATION: PARK
DESIGN SPEED: 40 MPH

TONY HORNIK, P.E.
FLORIDA REGISTERED PROFESSIONAL ENGINEER No. 41941
440 COURT STREET
CLEARWATER, FLORIDA 33756
(727) 464-3840

DATE

PROJECT PRODUCTION TEAM (CORE MEMBERS)

DESIGN: GUILLERMO "BILLY" BAY (PROJECT MANAGER) (464-4388)
PARK ENGINEER: ED LUCAS
PARK SUPERVISOR: BOB BROWNING
D.E.M.: JIM MEYER
RIGHT-OF-WAY: SONNY NAAR
CONSTRUCTION: DON KERSTING
SURVEY: DANNY BURGESS
TRAFFIC: ROBERT DAVIS
HIGHWAY: DENNIS GRIZZELL
UTILITY COORDINATOR: ROBERT JANOWSKI
PERMIT COORDINATOR: NANCY CASTRICONE,P.E.

SUBMITTED BY & RECOMMENDED FOR APPROVAL BY: RUDY GARCIA, DIVISION ENGINEER — DATE

RECOMMENDED FOR APPROVAL BY: ELIZABETH WARREN, DIRECTOR OF PARK DEPARTMENT — DATE

RECOMMENDED FOR APPROVAL BY: JAN R. HERBST, P.E., DIRECTOR OF ENGINEERING — DATE

APPROVED BY: J. KEITH WICKS, P.E., DIRECTOR OF PUBLIC WORKS — DATE

SHEET U-7

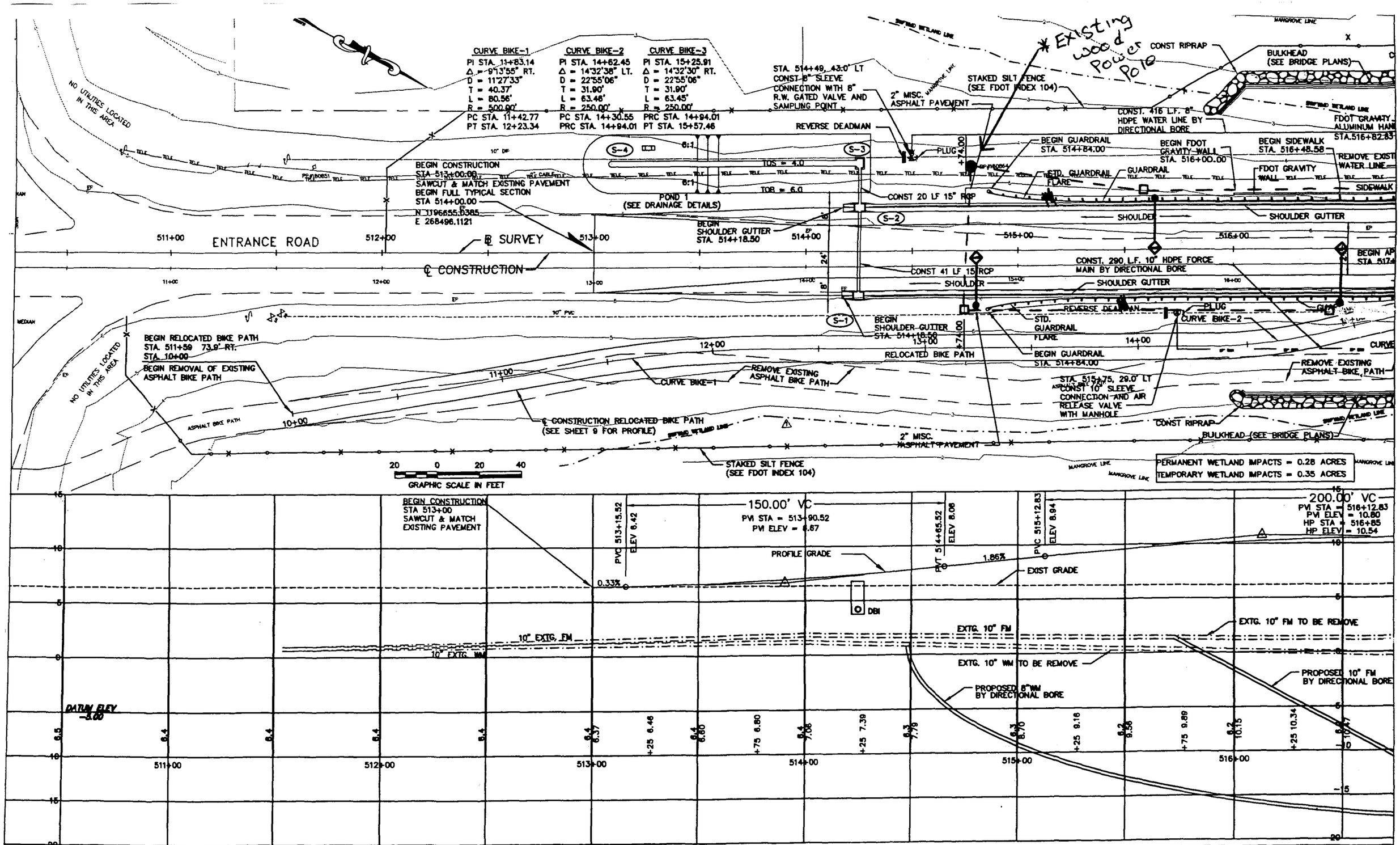

REVISIONS	BY	DATE

SURVEY BOOK No.:		
SURVEY DIVISION	BY	DATE
SURVEYED		
TECHNICIAN		
CHECKED		
DESIGN DIVISION		
DESIGNED	SMB/CQE	10/01
DRAWN	SMB/CQE	
CHECKED	10/01	10/01

PINELLAS COUNTY, FLORIDA
Public Works

ENGINEERING DEPARTMENT
440 COURT STREET
CLEARWATER, FLORIDA 34616
PHONE (727) 464-3251

LAND SURVEY DIVISION
18221 U.S. HWY. 19 NORTH
CLEARWATER, FLORIDA 34625-5347
PHONE (727) 464-8904

TONY HORNIK FLORIDA REGISTERED PROFESSIONAL ENGINEER No. 41941 DATE

FORT DESOTO
WATER CIRCULATION
IMPROVEMENTS

PLAN & PROFILE
ENTRANCE ROAD

SHEET U-8

DATE: OCTOBER, 2002
PROJECT NO.: 921573
SURVEY FILE NO.: 228
SHEET C-7 OF 26
FILE: DESIGN1PC
VIEW: EP&P1

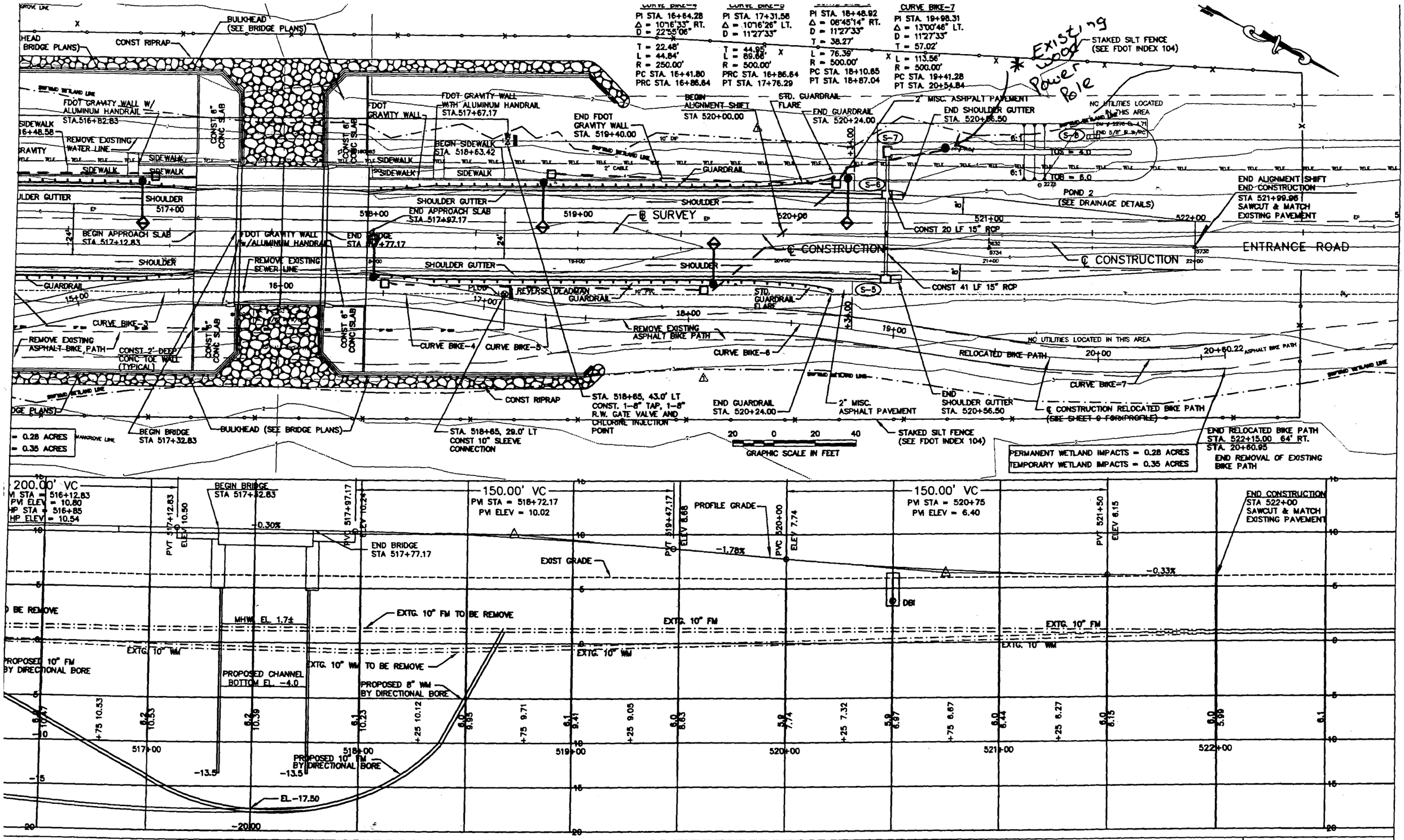

REVISIONS	BY	DATE

SURVEY BOOK No.:		
SURVEY DIVISION	BY	DATE
SURVEYED		
TECHNICIAN		
CHECKED		
DESIGN DIVISION		
DESIGNED	RMB/CGE	10/01
DRAWN	RMB/CGE	
CHECKED	10/01	10/01

PINELLAS COUNTY, FLORIDA
Public Works

ENGINEERING DEPARTMENT
440 COURT STREET
CLEARWATER, FLORIDA 34616
PHONE (727) 464-3251

LAND SURVEY DIVISION
22211 U.S. HWY. 19 NORTH
CLEARWATER, FLORIDA 34625-5347
PHONE (727) 464-8604

TONY HORRNIK FLORIDA REGISTERED PROFESSIONAL ENGINEER No.41941 DATE

FORT DESOTO
WATER CIRCULATION IMPROVEMENTS

PLAN & PROFILE
ENTRANCE ROAD

SHEET U-9

DATE: OCTOBER, 2002
PROJECT NO.: 921573
SURVEY FILE NO.: 228
SHEET C-8 OF 26
FILE: DESIGN1PC
VIEW: EP&P2